Small Gasoline Engines

CONTENTS

Problem Area I

LEARNING TO USE MEASURING DEVICES

Many measuring devices and measuring instruments are used in maintenance and repair of small gasoline engines. The manufacturer prepares an instruction, maintenance, and repair manual commonly referred to as the owner's guide, or owner's manual. A preventative maintenance program for any gasoline engine should be based upon the manufacturer's recommendations outlined in the owner's manual. In reading the owner's manual, you will notice that for certain operations of maintenance a clearance measurement is listed usually expressed in one-thousandths of an inch. For example, the sparkplug gap might be listed as .025 meaning that for normal operation the sparkplug should be gapped at .025 inch. Gaps or measurements are normally listed for the armature air-gap, breaker-point opening, piston clearance, ring-groove clearance and other tolerances.

Competency in engine repair or maintenance requires proficiency in use of various measuring devices. Since most measurements are stated in one-thousandths inch and since most devices are based upon this dimension, it is essential that you have a basic understanding of decimal fractions and decimal equivalents. Common fractions, such as 1/8 inch, must be converted to the decimal fraction of .125 inch because instruments, such as a micrometer, are read in one-thousandths inch. Since all decimal fractions must be carried to three places, 1/2 inch is equal to .500 inch. Common fractions are changed to decimal fractions by dividing the numerator by the denominator, and carrying out to three places beyond the decimal.

THE MICROMETER

One of the more common measuring devices used is the micrometer, shown in figure 1. Since it is designed to measure machine work where tolerances are quite close, it is essential that the micrometer be very accurate. In most cases, the micrometer is an expensive but very useful instrument, which is quite easy to use once you understand its main parts and a few basic operating principles.

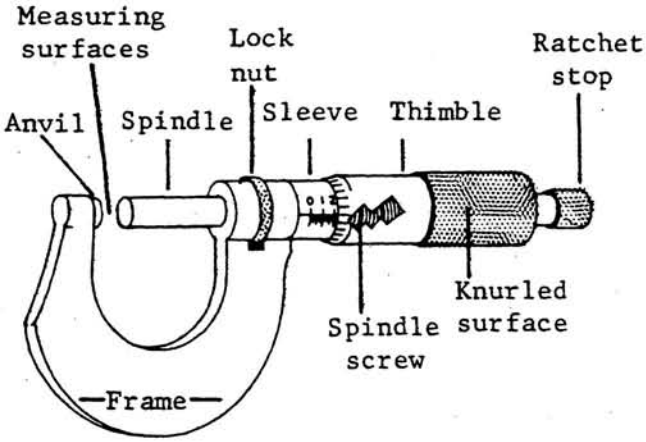

Figure 1. An outside 1-inch micrometer

First you must understand the marks on the sleeve and thimble. If you turn the thimble until the 0 marks on the thimble and sleeve come together, the micrometer is at its smallest measurement. On the 1-inch micrometer, shown in figure 2, the measurement is 0.000 inch; on a 2-inch micrometer the measurement is exactly 1.000. A micrometer should occasionally be checked for accuracy. Micrometer manufacturers provide information on proper adjusting methods.

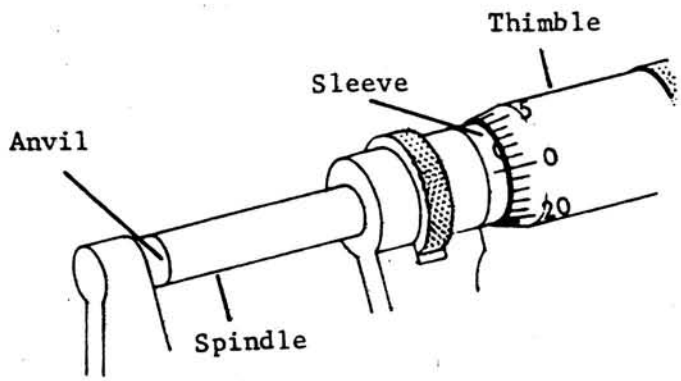

Figure 2. Testing the exactness of a 1-inch micrometer

The marks on the thimble represent .001 inch each. If you turn the thimble to the next line on the thimble, as in figure 3, and if this is a 1-inch micrometer, the spindle will be .001 inch from the anvil. If you turn the thimble to the 5 mark on the thimble, the spindle will then be .005 inch from the anvil.

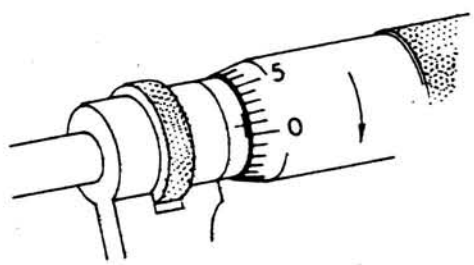

0.001

Figure 3. Micrometer showing a reading of one-thousandths inch (.001)

One complete revolution of the thimble is equal to .025 inch because each turn of the thimble moves one mark on the sleeve. This means that each mark on the sleeve is .025 inch. Every fourth line on the sleeve is a little longer than the others.

To find out how much the micrometer is opened (the distance between the measuring surfaces) the marks on the sleeve may be read like an ordinary rule. Remember that the numbers 1, 2, and 3 mean .100 inch, .200 inch, and .300 inch. To this add the thousandths that show on the thimble. For example, the readings in figure 4 are: "A" = .300, and "B" = .337 (.300 + .025 + .012).

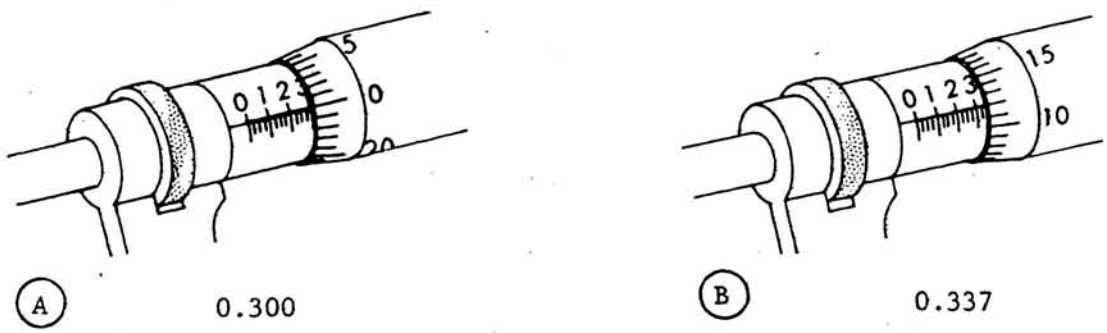

Figure 4. Reading the micrometer

A number of different kinds of micrometers are manufactured for special uses. The outside micrometer is the most common type. It is used to measure the outside diameter of round objects, and the width and thickness of flat pieces. The inside micrometer is used to measure the diameter of a hole--such as the inside diameter of an engine cylinder sleeve. The depth micrometer, another common type, is used to measure the depth of holes, grooves, and slots. Regardless of type, micrometers are all read in the same manner.

Micrometers usually are designed to measure within a 1-inch range, such as a 1-inch micrometer would measure distance between 0 inch and 1 inch. To measure an engine piston that is approximately 2-1/4 inches in diameter you would need a 3-inch outside micrometer which would measure

distance from 2 to 3 inches. Some larger micrometers have adapter rods which permit their use over a longer range of distances, such as 0 to 8 inches.

THICKNESS GAGES

A variety of different gages are manufactured for measuring the clearance or gap between two parts. Thickness gages most commonly used when working on gasoline engines are the feeler gage, wire gage, and Plastigage*. Thickness gages are used to make numerous measurements which include sparkplug gap, armature air-gap, breaker-point gap, rod cap clearance, and end-clearance on a piston ring.

The feeler gage, illustrated in figure 5, is probably the most common of all thickness gages. It consists of a number of thin, steel blades which fold into a handle. Each blade is a different thickness. The thicknesses represented usually range from .001 inch to .025 inch in increments of .001, .003, or .0005 inch. Each blade is stamped with its thickness. The feeler gage can be used to measure sparkplug gap, armature air-gap, and the breaker-point gap.

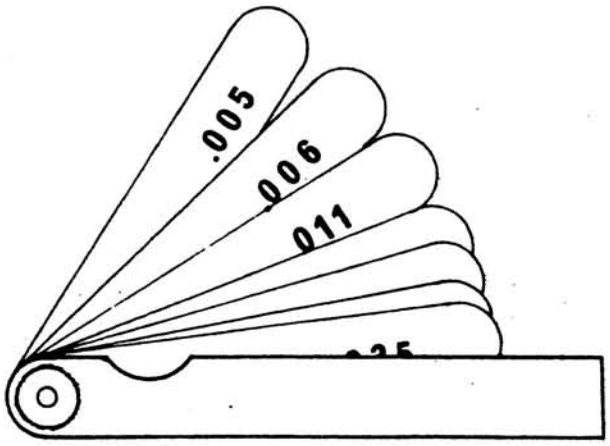

Figure 5. Feeler gage

*Plastigage -- A tradename for a commercial product developed by Perfect Circle Division, Dana Corporation, Hagerstown, Indiana. Where trade names are used no discrimination is intended by the College of Agriculture or the Department of Agricultural Education.

The round-wire gage has several applications for working with gasoline engines. The most common of these is measuring the electrode gap on a used sparkplug. One type of round, or wire measuring, gage is illustrated in figure 6. It has wires of different thicknesses which will fold back into the handle in a manner similar to that of the feeler gage.

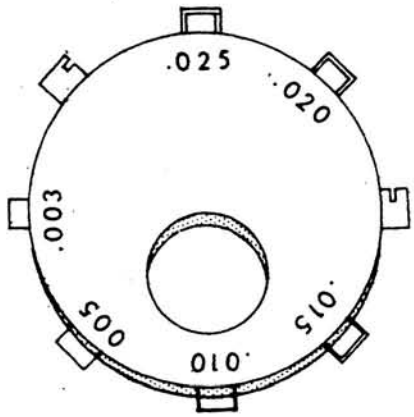

Figure 6. Round-wire gage

Plastigage can be used to measure clearance between the bearing journal on a crankshaft and its bearing or rod cap. It consists of a thin plastic material which is placed between the shaft and rod cap, as shown in figure 7.

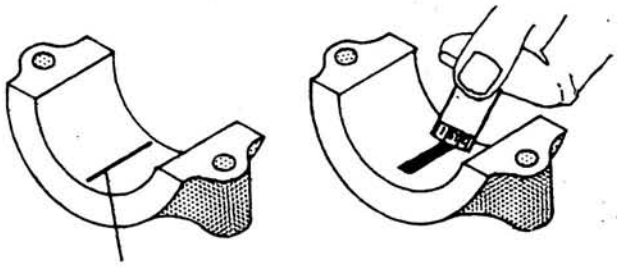

Figure 7. Using Plastigage to check crankshaft to connecting rod bearing clearance

The rod cap is tightened to a recommended torque measurement, flattening the plastic. The rod cap is then removed, and the flattened plastic is measured for width by comparing it to a scale supplied by the manufacturer. This scale provides a thickness reading in either thousandths of one inch or in millimeters.

These are some of the different types and applications of thickness gages. They, like the micrometer, are made for specific uses. Gages can serve a very important function when their operation and intended use is thoroughly understood.

Classroom Exercise I

LEARNING TO USE MEASURING DEVICES

1. What are the decimal equivalents of these fractions: 7/8 inch? _____; 1-3/10 inch? _____; and 21/64 inch? _____

2. Write the following numbers: seven hundred forty-two thousandths, _____; and three ten-thousandths, _____

3. Write out the following:

   a. .288 inch _____

   b. .0004 inch _____

4. Identify the parts of the micrometer in the spaces provided below:

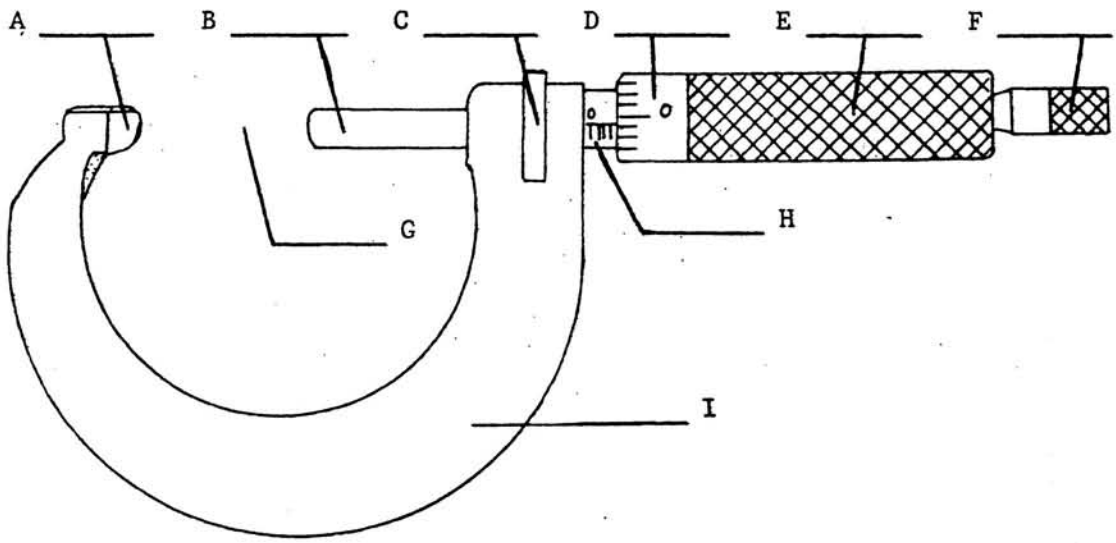

5. On the micrometer, how many marks are around the thimble? _____ Each individual mark on the thimble represents a measured distance of _____ inch. The distance between each mark on the sleeve is equal to _____ inch.

6. One full revolution of the thimble on the micrometer is equal to what measurement expressed in decimal? _____ inch; expressed in fraction? _____ inch.

7. Could you measure 1-3/4 inch stock with a 1-inch outside micrometer? _____; with a 2-inch outside micrometer? _____; with a 3-inch outside micrometer? _____

8. Give the micrometer readings in the spaces provided below. Assume that "A" and "B" are 2-inch micrometers and "C" is a 3-inch micrometer.

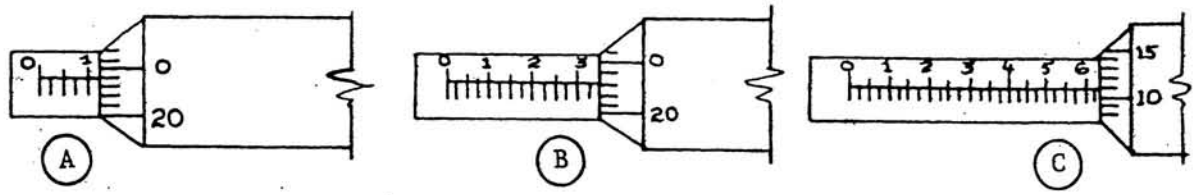

_____ _____ _____

9. Checks made with telescoping gages on a cylinder bore yield a micrometer measurement for cylinder bottom as shown below in "A", and for cylinder top as shown in "B". Assuming micrometer "A" is a 3-inch micrometer and "B" is a 4-inch micrometer, report each:

"A" = _____ inch "B" = _____ inch

Report the difference between the top and bottom measurement: _____ inch.

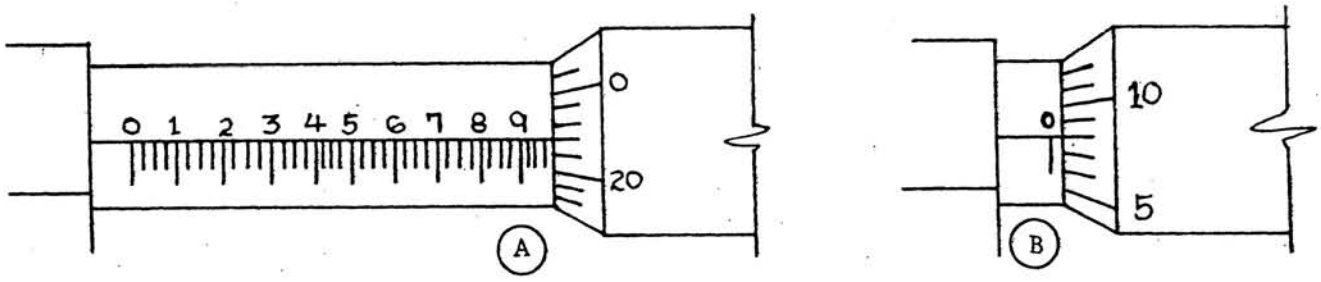

10. What combination of blades would you use to check the breaker-point gap on an engine which has a recommended clearance of .033 inch with a feeler gage (blade type) that has blades from .001 inch to .025 inch in increments of .003 inch? _____

_____

This feeler gage would contain _____ different blades.

11. When using Plastigage, the more the material is flattened, the _____ the measurement.

12. Convert the following inch-pounds to foot-pounds: 144 inch-pounds = _____ foot-pounds; 78 inch-pounds = _____ foot-pounds; and 48 inch-pounds = _____ foot-pounds.
Sparkplugs, head bolts, and connecting rod bearings are parts that commonly need to be tightened to proper specifications given in either foot-pounds or inch-pounds. Assume you are using a torque wrench which reads in inch-pounds, and you wish to tighten a sparkplug to 20 foot-pounds. How many inch-pounds should you record on the torque wrench?_____

Problem Area II

ENGINE OPERATION AND COMPRESSION

Introduction - It is important for the student to realize that the principles of engine operation can be broken down into three parts--compression, ignition, and carburetion. We will study them separately; however, they must work systematically to make a smooth running engine that produces the power for which it has been designed.

At the end of this problem area are a classroom exercise and a laboratory exercise. These exercises, and other exercises in the small gasoline engines unit, are used to give the student practical experience in engine disassembly and reassembly as well as an understanding of engine operation principles.

This problem area is designed to give the student a basic understanding of what makes an engine "tick," from a compression standpoint. In later problem areas, ignition and carburetion will be discussed separately in a similar manner as compression is discussed here.

COMPRESSION

Compression occurs in an engine when a piston squeezes the air-fuel mixture against its cylinder head. When a small gasoline engine produces the power for which it was designed, there is little or no loss of compression. A simple test of compression is to spin the flywheel in the opposite direction of operating rotation. If the flywheel rebounds strongly on the compression stroke, the compression is acceptable.

FOUR-STROKE CYCLE ENGINE OPERATION

Many small engines are four-stroke cycle engines commonly called four-cycle engines. The student should become familiar with the basic component

parts of the engine that make it possible to convert up and down, or linear motion, into rotary motion (Fig. 8).

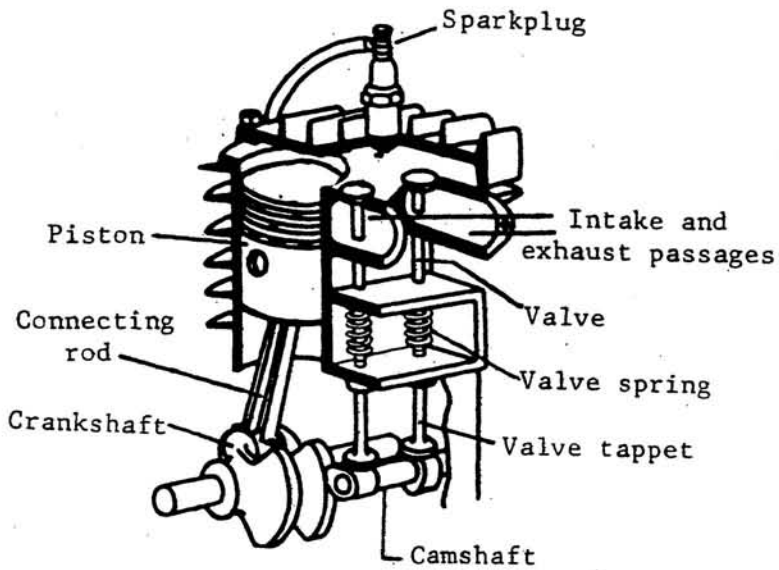

Figure 8. Basic parts of a four-stroke cycle engine

The first event in the operation of the four-stroke cycle engine is the intake stroke. With the exhaust valve closed and the intake valve open, the piston moves downward, and the air-fuel mixture is drawn from the carburetor into the cylinder as shown in "Intake" of figure 9.

After the air-fuel mixture enters the cylinder, the intake valve closes, and the piston moves upward on the compression stroke. The air-fuel mixture becomes greatly compressed in the small space between the top of the piston and the cylinder head.

As the piston approaches its peak of travel, the spark ignites the compressed air-fuel mixture. The expansion of burning gases forces the piston downward toward the crankshaft. This is the power stroke.

The exhaust valve opens, and the upward movement of the piston, on the exhaust stroke, forces the burnt gases out of the cylinder. The exhaust valve closes, the intake valve opens, and the cycle is repeated.

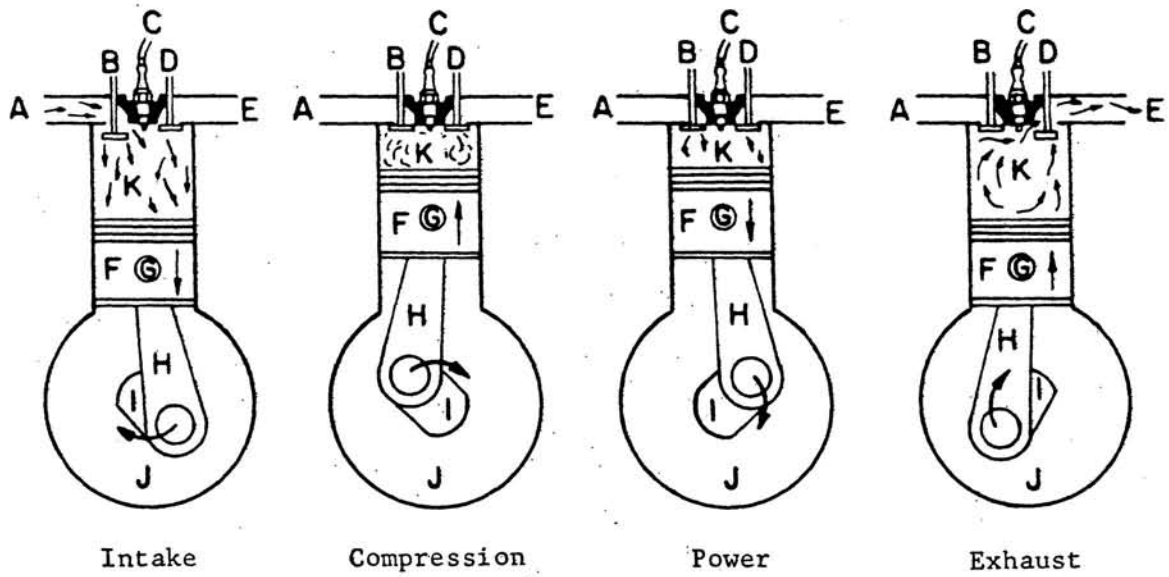

Key:

A=Intake passage
B=Intake valve
C=Sparkplug
D=Exhaust valve
E=Exhaust passage
F=Piston
G=Piston pin
H=Connecting rod
I=Crankshaft
J=Crankcase
K=Combustion chamber

Figure 9. Four-stroke cycle engine operation

Four strokes complete the cycle. The crankshaft makes two complete revolutions while the intake, compression, power, and exhaust strokes are completed. Another way of looking at the four-stroke cycle is by its five events. The order in which they occur is: (1) intake, (2) compression, (3) ignition, (4) power, and (5) exhaust.

TWO-STROKE CYCLE ENGINE

In the operation of a two-stroke cycle engine--commonly called a two-cycle engine--when the fuel charge is ignited, downward travel of the piston uncovers the exhaust port first and then the intake port ("A" and "B" of figure 10). The piston also compresses the fuel mixture in the crankcase as it moves downward. The resulting pressure closes the reed valve, and forces the fuel mixture inside the crankcase, through

the intake port, and into the combustion chamber as shown in "B" of figure 10. This incoming fuel helps force the exhaust gases out the exhaust port. As the piston moves upward, it covers the intake and exhaust ports and compresses the fuel mixture in the combustion chamber as shown in "C" of figure 10. At the same time, the pump-like action of the piston moving up in the cylinder creates a vacuum in the crankcase. Due to the lower pressure in the crankcase, the reed valve opens and a new fuel charge is drawn into the crankcase from the carburetor. The cycle is then repeated with two strokes in each cycle. The same five events that occur in the four-stroke cycle engine take place during the two strokes of the two-stroke cycle engine. They are: (1) intake, (2) compression, (3) ignition, (4) power, and (5) exhaust. However, the exhaust and intake events overlap and occur at approximately the

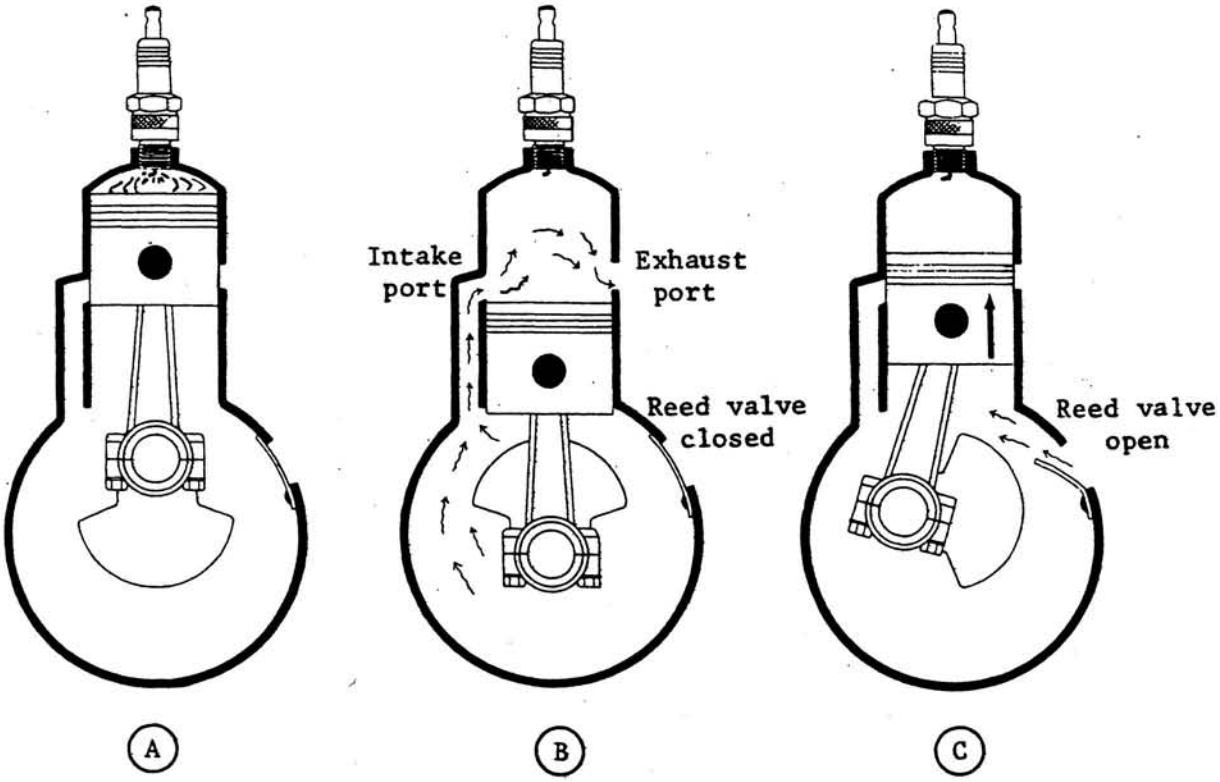

Figure 10. Two-stroke cycle engine operation

same time in the two-stroke cycle. As a result, two-stroke cycle engines have one power stroke for each revolution of the crankshaft.

Piston displacement is the volume of air moved out of the combustion chamber by the piston when the crankshaft moves from bottom-dead center to top-dead center position. Usually piston displacement is expressed in cubic inches for small gasoline engines, but some may be given in cubic centimeters (Fig. 11). Displacement is a reliable figure for indicating the potential power output of an engine. Piston displacement is computed with this formula:

$$\text{Displacement} = \frac{(\text{Bore})^2}{4} \times \pi \times \text{Stroke}$$

If one considers an engine with a bore of 2.25 inches and a stroke of 1.75 inches, its displacement in cubic inches would be:

$$\text{Displacement} = \frac{(2.25)^2}{4} \times 3.14 \times 1.75 = 6.96$$

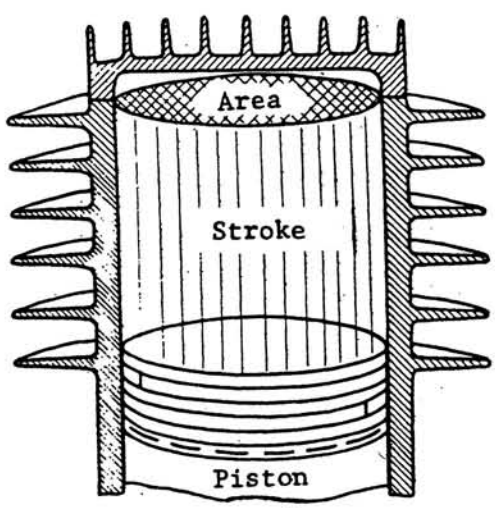

Figure 11. Piston displacement

Compression ratio is a mathematical relationship of the volume of the combustion chamber when the piston is at its lowest point compared to its volume when the piston is fully up. Most small gasoline engines

have compression ratios in the range of 5:1 to 6:1. A compression ratio of 6:1, for example, means that the space in the cylinder when the piston is at the top of its stroke is only one-sixth as great as when the piston is at the bottom of its stroke (Fig. 12). Generally, the higher the compression ratio, the greater the engine's fuel efficiency.

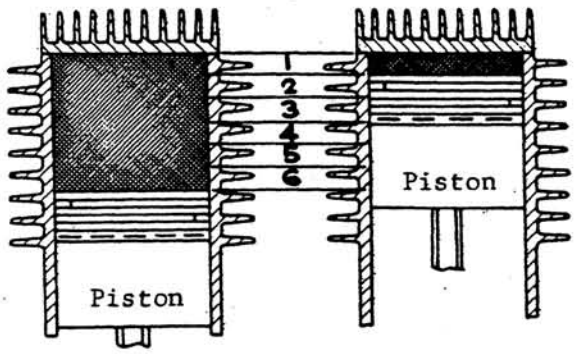

Figure 12. Compression ratio 6:1

VALVES

Properly seated valves on four-stroke cycle engines, and reeds and ports on two-stroke cycle engines, are important factors in maintaining efficient compression. To produce an air tight cylinder that will insure adequate compression, the valve face must seal properly against the valve seat.

The four-stroke cycle engine operates with two valves per cylinder--the intake valve lets the air-fuel mixture into the cylinder, and the exhaust valve lets the burned gases out of the cylinder. The important parts of a valve are the head, margin, face, and stem as shown in figure 13. The valve face makes contact with the seat, and the stem slides along the valve guide.

Temperatures around the head and margin area of the exhaust valve may exceed 1200°F. This high temperature is caused by exhaust gases

passing out of the cylinder. It is, therefore, very difficult to cool the head of the exhaust valve. The cylinder head, the cylinder, and the piston top are exposed to the same heat; however, these parts are cooled by air from the flywheel fins and oil from the crankcase. Due to the difference in temperatures, the exhaust valve can burn quite easily and may need replacement more often than the intake valve. The intake valve is cooled by the incoming air-fuel mixture.

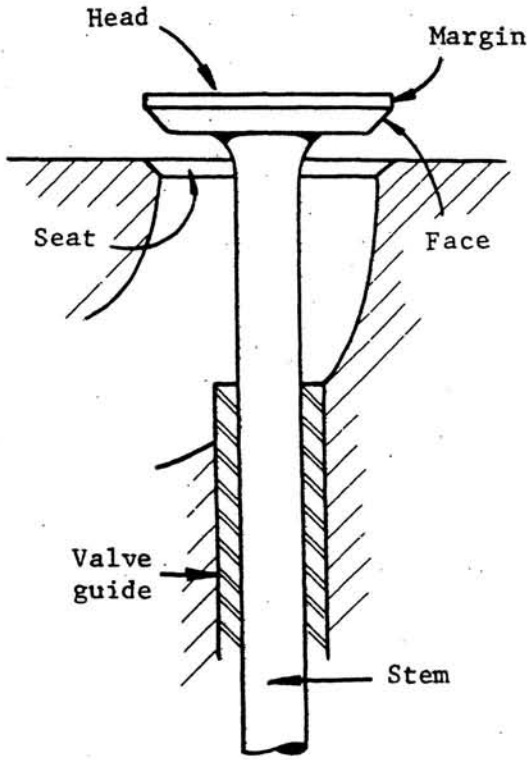

Figure 13. Good compression depends on proper seating of valves

A valve is opened by its valve tappet as the tappet rides over the lobe on the camshaft. The valve is closed by a valve spring acting against the tappet. Correct valve timing is very important for smooth, efficient operation. When an engine is operating at 3,000 rpm, each valve opens and closes in about 1/50 of a second. Most engines have a timing mark on

both the cam gear and the crankshaft gear that must be registered for proper timing. Refer to the operator's manual for the correct method of timing each engine.

Carbon and lead accumulations on the valve stem and valve face will, in many cases, hold the valve open and allow the valve to burn. Improper tappet clearance will hold the valve open and cause the valve to burn, too. Badly worn or burnt valves should be replaced. Repairable valves can be refaced and seated. Valve seats can also be refaced to give a better seal. As a general rule, valves should be discarded when the margin becomes less than one-half its original thickness (Fig. 14).

Tappet clearance should be checked by placing a feeler gage between the valve tappet and the valve stem. Operator's manuals list the recommended clearances. When checking tappet clearance, turn the crankshaft until one of the valves is at its highest position; then turn the crankshaft one revolution and insert feeler gage. Repeat this procedure for the other valve. Grind or file off the end of the valve stem if necessary, to obtain desired clearance. If the tappet clearance is too great, the valve will not be open long enough. To change this it is necessary to reface the valve, its seat, or both.

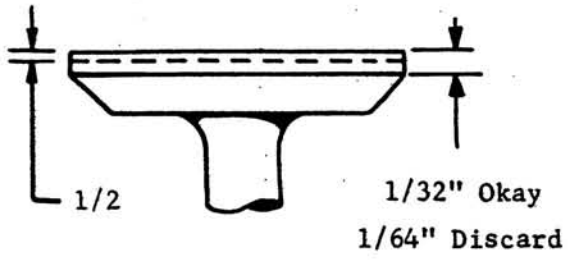

Figure 14. Valve should be discarded when margin is less than one-half original thickness

INTAKE AND EXHAUST PORTS

Intake and exhaust ports of the two-cycle engine are sealed by the action of the piston rings on the cylinder walls. Proper fit of these parts prevents loss of compression through the ports. Loss of compression in a two-stroke cycle engine may also occur if the reed intake valve does not seal properly, or if worn main-bearing oil seals or poorly sealed crankcase gaskets permit leakage.

RINGS

The main function of the rings is to seal the space between the piston and cylinder wall, thus, maintaining an air-tight combustion chamber. Piston rings are found in grooves near the top of the piston as shown in figure 15. The two upper rings are compression rings. The lower ring, or oil ring, is perforated to permit lubrication of the cylinder wall. Although the middle ring is a compression ring, it is also referred to as a scraper ring. It aids in oil control by scraping the cylinder walls to keep oil out of the combustion chamber. It is usually shaped differently than the top compression ring. Two-stroke cycle engines typically have either two or three compression rings, and no oil ring.

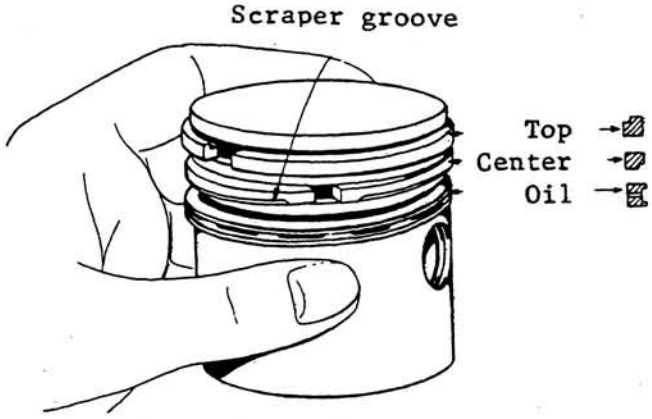

Figure 15. Typical piston ring arrangement on a four-stroke cycle engine

Piston ring-gap - When the piston is operating in the cylinder, the ends of each piston ring are separated by a slight gap referred to as piston ring-gap, or end-clearance. This gap permits the ring to exert pressure on the cylinder wall for a tight seal, yet allows expansion when the ring becomes hot. End-clearance can be checked by inserting each ring into the cylinder until it is about one inch from the top of cylinder (Fig. 16). A feeler gage is used to check end-clearance. If end-clearance is greater than the manufacturer's recommendation, the ring set should be discarded and new rings installed. If excessive end-clearance exists after a new ring is installed, this clearance often is used as criteria for cylinder resizing.

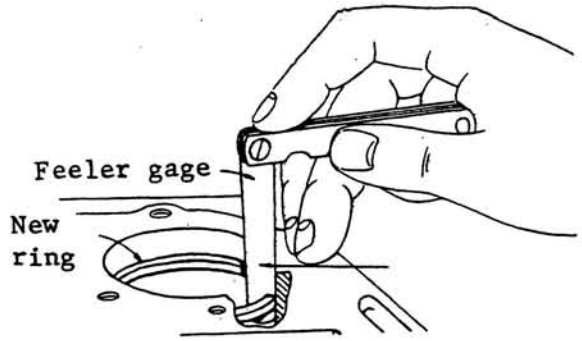

Figure 16. Checking ring-gap or end-clearance

Ring-groove clearance - The piston ring-grooves should be cleaned before ring-groove clearance is checked. Place a new ring in the top groove, and check the remaining space with a feeler gage as shown in figure 17. If the clearance is greater than the manufacturer's recommendation, a new piston is needed.

Figure 17. Checking ring-groove clearance

CAUSES OF POOR COMPRESSION

For an engine to produce the power for which it was designed, compression must be adequate. When an engine has less power than it should have, and a lack of compression seems to be the problem, the operator may be suspicious of a number of causes of poor compression. Some of these causes are listed below:

Loose, cracked, or warped cylinder head	Poorly seated or worn valves
Damaged head gasket	Scored cylinder wall
Valve stuck open	Worn or broken rings
Improper tappet clearance	Piston cracked or broken
Burnt valves	Loose sparkplug

These causes may be acting singly, but more often several causes are acting concurrently. Some causes of poor compression are easily detected while others may best be detected when an engine is disassembled and carefully examined. Unfortunately, serious compression loss often must be corrected by a major engine overhaul. This may require refacing the valves and/or replacing piston rings.

Classroom Exercise II

ENGINE OPERATION

1. The four strokes of a four-stroke cycle engine are _____, _____, _____, and _____.

2. In a four-stroke cycle engine how many strokes are completed in two revolutions of the crankshaft? _____
   How many in one revolution of the crankshaft? _____

3. Determine the piston displacement for an engine that has a bore of 2.5 inches and a stroke of 2.0 inches. _____

4. Give the function of each engine part:

   a. sparkplug _____

   _____

   b. piston _____

   _____

   c. piston pin _____

   _____

   d. connecting rod _____

   _____

   e. crankshaft _____

   _____

   f. timing gears _____

   _____

5. The valves are opened by the lobes on the _____.

6. The valves are held in a closed position by _____.

7. Explain the procedure for correcting too little tappet clearance.

   _____

   _____

   Too much tappet clearance. _____

   _____

8. In answering this question and questions 9 and 10, use the four-stroke cycle-timing circle shown below. Determine the number of degrees the intake valve is open _____; the number of degrees the exhaust valve is open _____.

9. The compression stroke is effective for _____ degrees, and the power stroke remains effective for approximately _____ degrees.

10. The intake and exhaust valves are both open at the same time for a total of _____ degrees.

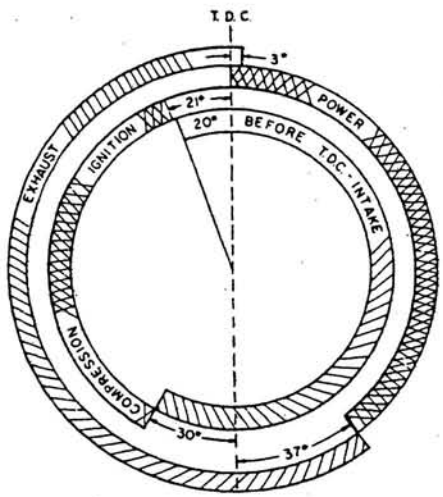

Typical valve timing circle for a four-stroke cycle engine

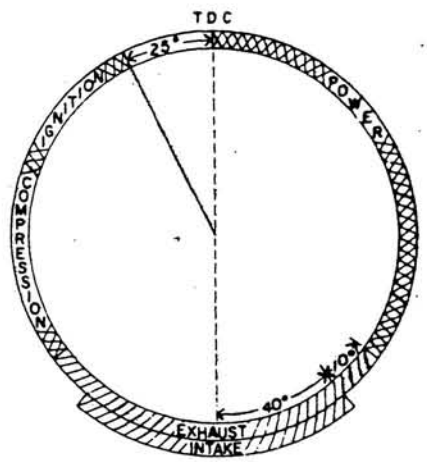

Typical valve timing circle for a two-stroke cycle engine

11. In answering this question and questions 12 and 13, use the two-stroke cycle-timing circle shown above. Determine the number of degrees the intake port is open _____; the number of degrees the exhaust port is open _____.

12. The compression stroke is effective for _____ degrees, and the power stroke remains effective for _____ degrees.

13. The intake and exhaust ports are both open for a total of _____ degrees.

14. Name the lettered parts of the valve.

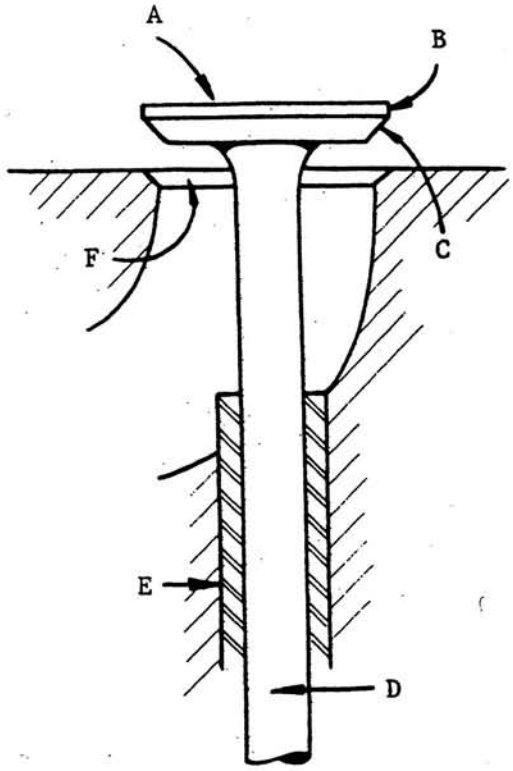

A _____

B _____

C _____

D _____

E _____

F _____

15. Based upon margin dimension, when should a valve be replaced? _____

_____

16. What causes valves to burn? _____

_____

_____

17. The three common types of rings are the _____,

_____, and _____.

18. What is the main function of each ring? _____

_____

_____

Laboratory Exercise I

COMPRESSION

The questions and disassembly procedure listed below are designed to acquaint you with the operational and compression features of a small gasoline engine. Fill in the blanks below and complete the operations in the order listed as you carefully disassemble your laboratory engine.

1. Engine manufacturer _____.

   Serial number _____ Model number _____ Type number _____

2. Do a compression test by giving the flywheel a quick spin. Does the flywheel rebound sharply? _____

3. Check and report crankshaft end-play. _____
   What should be the range of crankshaft end-play? _____

4. Drain the oil; remove the sparkplug and muffler.

5. Disconnect and remove air cleaner, carburetor, gas tank, and governor linkage. Note the position of these parts. Draw a sketch of the governor linkage in respect to the carburetor and the governor system.

6. Remove the engine shroud.

7. Remove crankshaft screen, nut, and starter mechanism.

8. Remove the flywheel.

9. Remove cylinder head and head gasket.

10. Remove valve cover plate.

11. Measure and report the valve tappet clearance for each valve.

    Intake valve _____ Exhaust valve _____

    Report the clearance recommended by the manufacturer.

    Intake valve _____ Exhaust valve _____

12. Remove valve springs and valves. Report the condition of valve springs, valves, and valve seats.

13. Remove the crankcase cover plate.

14. Note the position of timing marks on the crankshaft and camshaft timing gears. If marks are not visible, use a center punch and properly mark them.

15. Remove camshaft and tappets.

16. Unbolt the connecting rod cap. Using Plastigage, measure and report the clearance between crankpin and connecting rod bearing._____

17. If needed, use a ridge reamer to remove the ridge left at the top of the cylinder.

18. Push the piston and rod out the top of the cylinder.

19. Remove crankshaft. Measure and report crankpin size. _____
What is its reject size? _____

20. Measure and report the size of connecting rod crankpin bearing._____
What is its reject size? _____

21. Measure and report the size of crankshaft journals. What are their reject sizes?

	Found	Reject sizes
Magneto journal	_____	_____
PTO journal	_____	_____

22. Measure and report the inside diameter of crankshaft (main) bearings. Report their reject sizes.

	Found	Reject sizes
Magneto bearing	_____	_____
PTO bearing	_____	_____

23. Remove piston from connecting rod.

24. Measure and report the following information about the connecting rod, piston pin, and piston. Report the reject sizes.

	Found	Reject sizes
Piston pin bearing (top end of connecting rod)	_____	_____
Piston pin	_____	_____
Piston pin bore	_____	_____

25. How many rings does this engine have? _____ Name them. _____

_____

26. Remove the top ring from its groove. Place it about one inch down into the cylinder in the same position as when on the piston. Measure and report its ring-gap. _____ What is the rejection size? _____

27. Using a new compression ring, place it in the top ring-groove of the piston and check ring side clearance. Report the measurement found. _____
What is the manufacturer's recommended reject clearance? _____

28. Report general condition of the piston.

29. Give an evaluation of the cylinder and cylinder wall surfaces. Make cylinder bore measurements according to manufacturer's recommendation.

30. Report the cylinder bore and stroke, according to specifications for this engine.

Bore _____ Stroke _____

31. Determine this engine's displacement in cubic inches.

Problem Area III

IGNITION

Introduction - The second part to understanding the total operation of small gasoline engines is ignition. Ignition systems may vary among engine types. For example, an automobile's ignition system uses a storage battery as its source of power, but even this system has many of the same component parts that you find in smaller engines--only that the configuration and placement of parts are somewhat different. Diesel engines, for all practical purposes, have no electrical ignition system. The high compression ratio of diesels makes the air-fuel mixture self firing.

In recent years, several small engine manufacturers have begun to use solid state ignition systems. The solid state ignition system will be discussed at the end of this Problem Area following page 35, after the magneto ignition system has been well explained. Especially, in the larger small engines, a battery powered ignition system may supply the power to energize the ignition system. However, the student should first understand both the magneto and solid state ignitions systems. Then at this point there should be no problem in understanding that instead of one or more magnets inducing a low voltage magnetic field to the ignition system, the battery supplies a connected voltage. Other accessories such as electric starters and lighting systems are closely related to the ignition system. These accessories will not be discussed in this text, since the serviceman must have the manufacutrer's repair manual whenever servicing these parts.

MAGNETO IGNITION SYSTEM

A strong spark at the sparkplug is required to ignite the air-fuel mixture in the combustion chamber of the small gasoline engine. Induced

electrical current comes from a rotating magnet rather than a battery. A high voltage, electrical current is used to produce a spark at the proper time in order to get full power from the engine.

Most small gasoline engine magneto ignition systems are of the flywheel type shown in figure 18. The system consists of two circuits--a primary and a secondary. Both circuits have windings which surround the same iron core called the armature. A permanent magnet is located in the flywheel rim with the armature and coil located either directly inside or outside the flywheel. Other parts of the magneto ignition system include the condenser, breaker-points, high tension lead (sparkplug wire), and the sparkplug. Study figure 18 and become familiar with the engine's magneto ignition system.

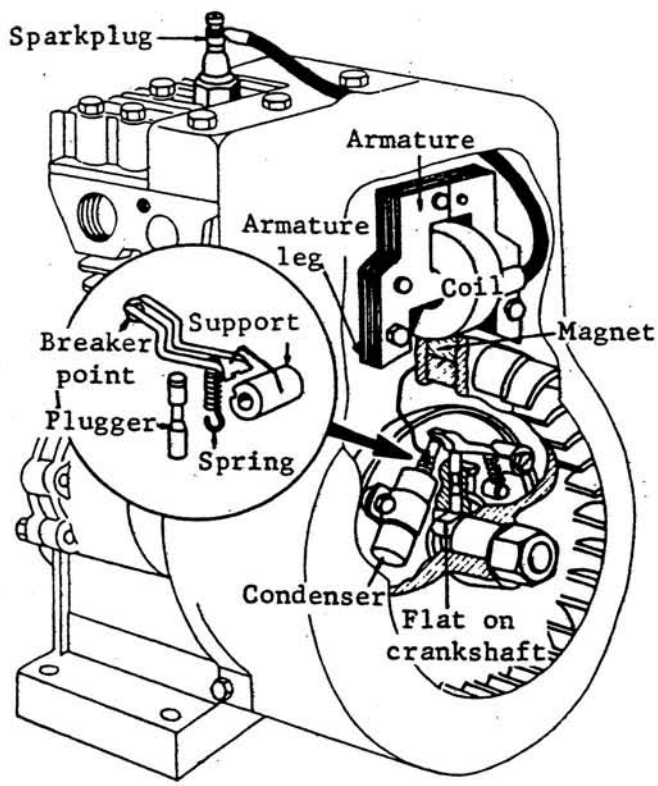

Figure 18. Magneto-ignition system

PERMANENT MAGNET

A permanent magnet is located in the flywheel. The magnet is quite strong and will retain its magnetism for a long time. Other magneto parts may be located either inside or outside of the flywheel, depending upon configeration used by the manufacturer. But in either case, the magnet mounted in the flywheel rim, revolves very close to the armature legs.

ARMATURE

The purpose of the armature is to "pick-up" and "build-up" a magnetic field from the moving magnet located in the flywheel. There is no direct or wired electrical connection between armature legs and the magnet. However, a magnetic field or flux is created within the armature legs by a phenomenon known as induction. Induction occurs as the flywheel magnet revolves very close to the armature legs.

The armature's iron case, in which magnetism is concentrated--and rapidly reversed from one direction to the other--is split up into many thin laminations. This prevents the build-up of any one large electrical path for an eddy current. The slight amount of oxide between laminations provides enough insulation to prevent the eddy currents from traveling from one lamination to the other. The eddy currents tend to heat the coil excessively which could cause coil failure.

One of the several critical adjustments in the magneto ignition system is the distance between the armature legs and the permanent magnet. This distance is called the armature air-gap. Manufacturers' literature specifies a measurement range for each engine model.

COIL

The main function of the coil is to increase the voltage so that a spark will jump across the sparkplug electrode gap, thus igniting the fuel-air mixture in the combustion chamber. For practical purposes the coil can be considered a step-up transformer since it takes low voltage and transforms it into high voltage.

The coil is made up of two parts--the primary and the secondary windings. The primary winding consists of about 175 turns of heavy-insulated wire wrapped around one part of the armature. The secondary winding consists of about 10,000 turns of very thin-insulated wire wound outside of the primary windings as shown in figure 19. In small gasoline engines, the coil is mounted on the armature's laminated core similar to that shown in figure 18.

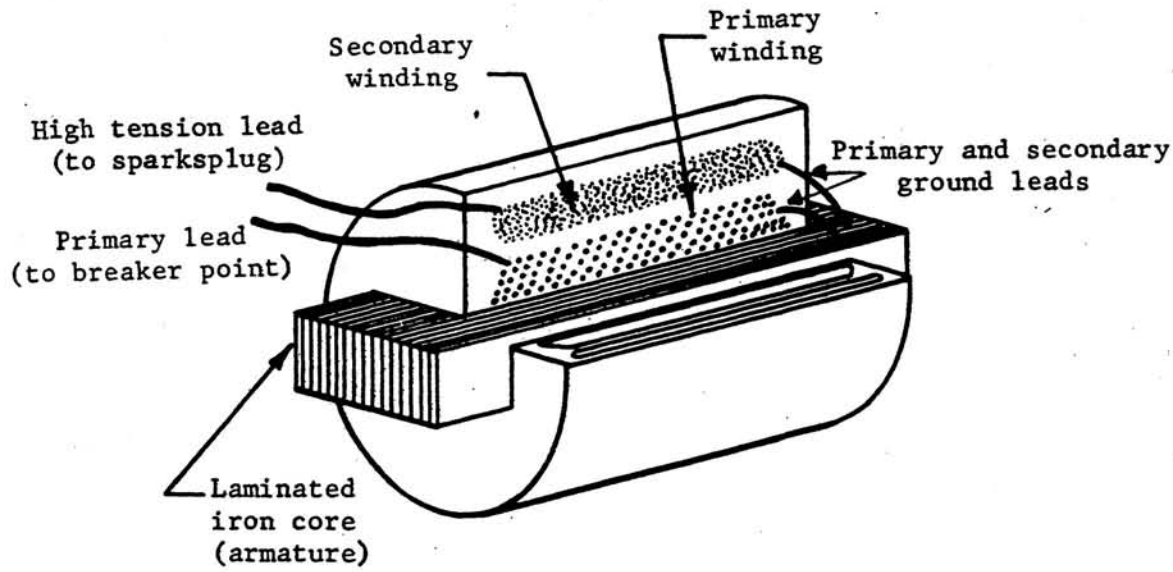

Figure 19. Armature with coil showing windings and leads

The primary circuit contains the primary coil winding and its leads, a set of breaker points and a condenser. One lead of the primary winding connects to ground while the other is attached to a breaker-point. See figure 22.

The secondary circuit contains the secondary coil winding, a high tension lead or sparkplug wire, and sparkplug. One lead from the secondary winding is grounded while the other is connected through the high tension lead to the sparkplug.

BREAKER-POINTS

The breaker-points are a part of the primary circuit. The two contact points are normally closed and touching each other, providing a path for the flow of current to ground. The points are opened and closed by a lobe or a flat on the camshaft, or the crankshaft. If operated by the camshaft, the points open once every two revolutions of the crankshaft, or every revolution if operated by the crankshaft. When points are operated by the crankshaft of a four-stroke cycle engine, a spark is produced between the exhaust and intake stroke in addition to the spark beginning the power stroke.

When the breaker-points are closed, current flows into the primary circuit. However, just before the spark is needed, the breaker-points are opened, breaking the primary electrical circuit and causing a reverse and collapse in the coil's magnetic field. Collapsing and reversing of the magnetic field around the primary winding transforms a very high voltage into the secondary circuit. This voltage is channeled out the high tension lead (sparkplug wire) through the sparkplug center electrode seeking a ground. This causes the spark to jump to the sparkplug's ground electrode, thus igniting the compressed air-fuel mixture.

The distance between breaker-points is called breaker-point gap. This gap is critical to the proper function of the ignition system. A feeler gage is used to check this measurement.

CONDENSER

The condenser is a storage reservoir for electricity in the primary circuit. It consists of two strips of foil with paper insulation between them (Fig. 20). The foil and paper are wound together so that one of the strips of foil can be grounded and the other strip of foil connected to one breaker-point.

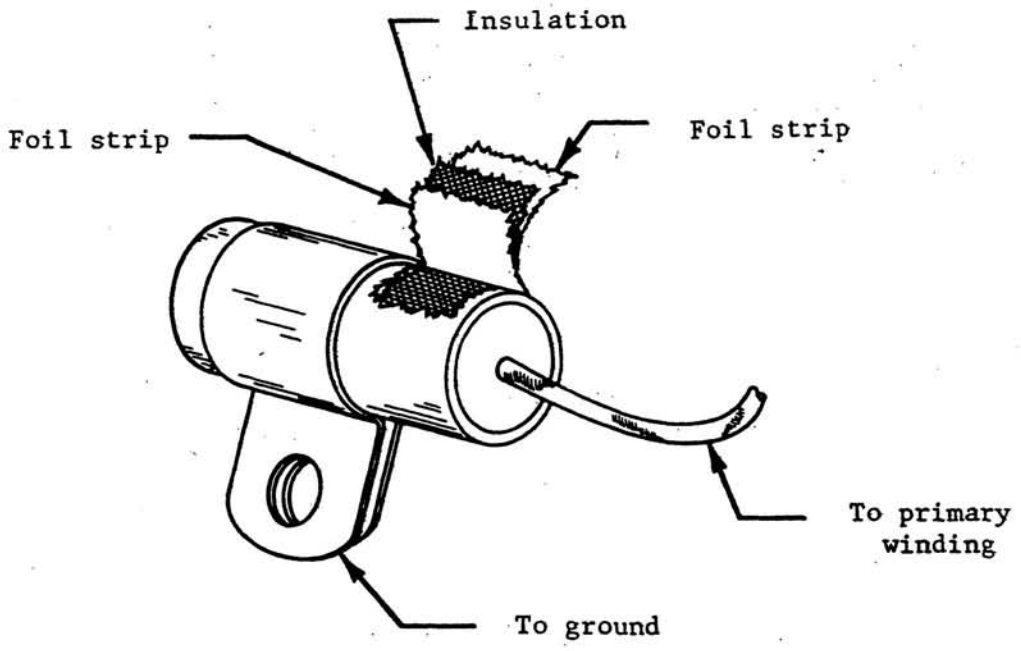

Figure 20. The condenser and construction details

The condenser's function is also to act as an electrical safety valve. It receives and stores the surge of current in the primary circuit to

prevent arcing across the contact points when the breaker-points are opening. The storage capacity of condensers is measured in microfarads.

SPARKPLUGS

The sparkplug in the ignition system provides the gap across which the voltage arcs to create a spark for ignition of compressed air and fuel. This voltage is carried from the secondary circuit of the coil through a high tension lead.

The sparkplug is a vital part of the ignition system. Basically, the sparkplug consists of a shell, ceramic insulator, center electrode, and ground electrode. The two electrodes are usually separated by a gap of .025 to .030 inch depending on the make and model of the engine. The path of electricity is down the center electrode, across the air-gap, and to the ground electrode.

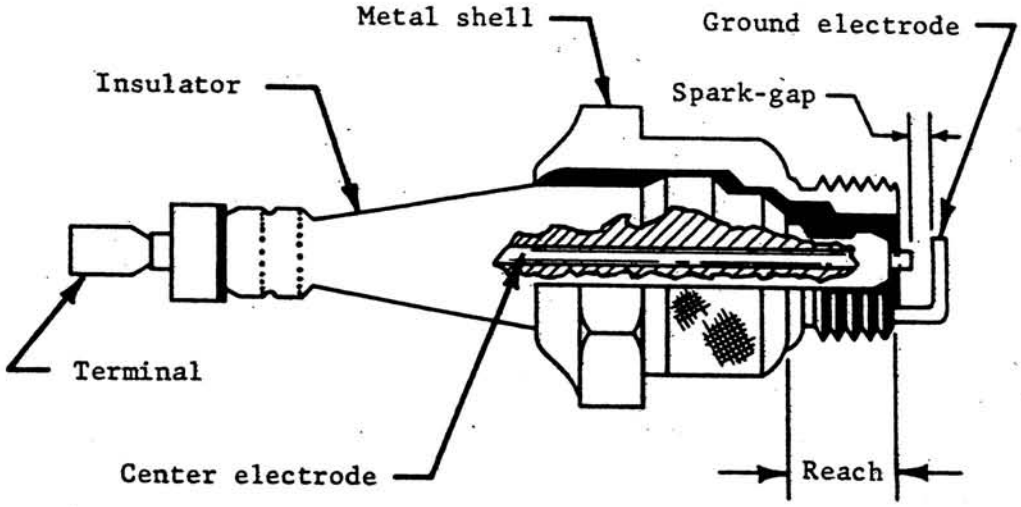

Figure 21. Typical sparkplug and construction details

THE COMPLETE MAGNETO CYCLE

When the permanent magnet moves away from the coil, it has no effect on the coil. But as the magnet comes closer, the primary coil "feels" the increasing magnetic field. The coil is being acted upon by the magnetic lines of force; therefore, current flows into the primary coil. This current passes through the breaker-points and into the ground. When the permanent magnet is adjacent to the armature legs and coil, the magnetic field around both coil windings is reaching its peak. See "A" in figure 22. At this point the piston is reaching the top of its stroke and is compressing the fuel mixture.

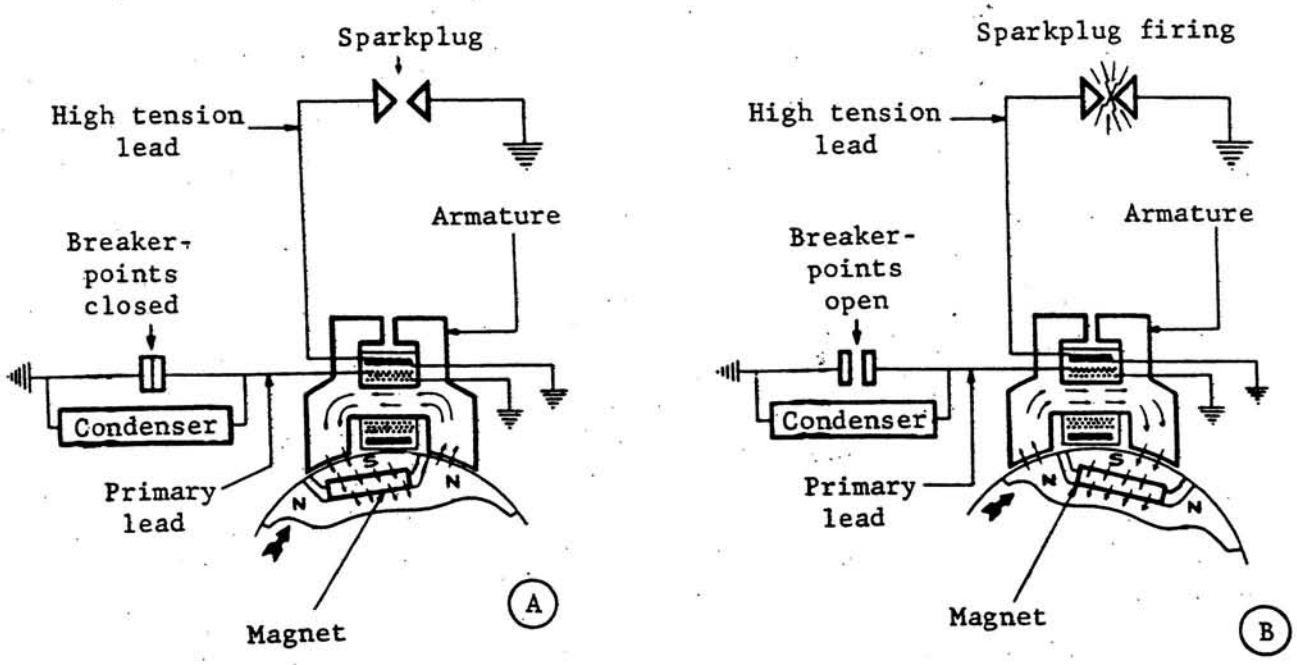

Figure 22. The complete magneto cycle. Left--Breaker-points closed. Right--Breaker-points open, causing high voltage in secondary coil.

When the breaker-points open, the primary circuit is broken; the flow of electricity is stopped; and the magnetic field suddenly reverses and collapses. The sudden reversing and collapsing of the magnetic field induces high voltage into the secondary coil causing the spark to jump the gap in the sparkplug ("B" in figure 22).

SOLID STATE IGNITION
AND
HOW IT WORKS

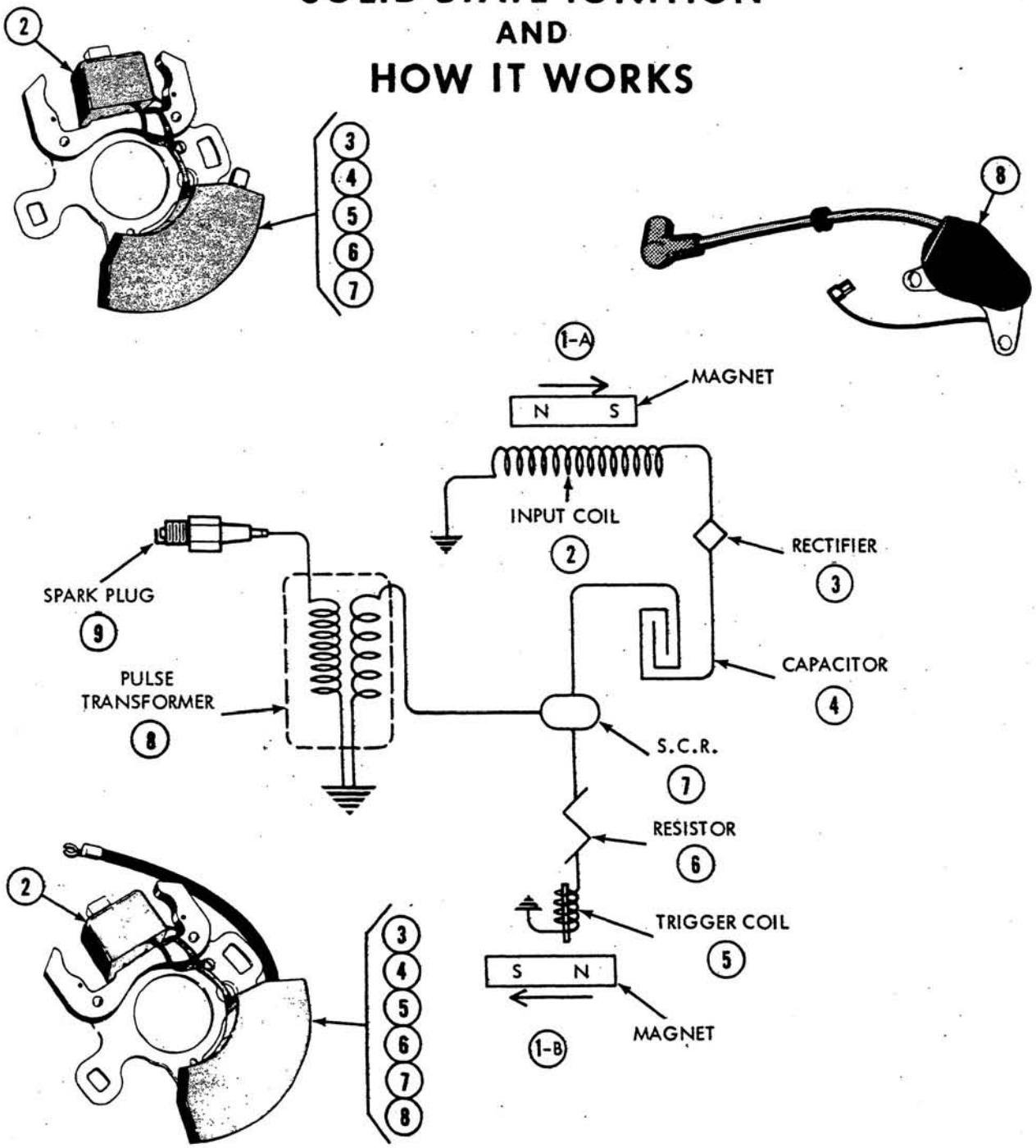

As the engine's (1-A) flywheel magnet passes the (2) input coil a low voltage A. C. current is induced into that coil. The current passes through a (3) rectifier converting this current to D. C. It then travels to the (4) capacitor where it is stored. The (1-B) flywheel rotates approximately 180° and as it passes the (5) trigger coil it induces a very small electric charge into that coil. The charge passes through the (6) resistor and turns on the (7) silicon controlled rectifier (solid state switch). With the (7) silicon controlled rectifier closed the low voltage stored in the (4) capacitor travels to the (8) pulsation transformer. Here the voltage is stepped up instantaneously and it is discharged across the electrodes of the (9) spark plug, firing before top dead center. Some units are equipped with an advance and retard feature. This is accomplished through the use of a second (5) trigger coil and (6) resistor set to turn on the (7) S. C. R., at a lower R. P. M., to fire the spark plug at top dead center.

Classroom Exercise IIIa

MAGNETO IGNITION SYSTEM

1. The magneto ignition system is made up of two circuits:

   a. _____ b. _____

2. Describe the function of the following parts:

   a. flywheel magnets _____

   _____

   b. armature _____

   _____

   c. armature leg to flywheel gap _____

   _____

   d. coil _____

   _____

   e. breaker-points _____

   _____

   f. condenser _____

   _____

3. List the parts of the following circuits:

primary	secondary
a. _____	a. _____
b. _____	b. _____
c. _____	c. _____

4. What causes the breaker-points to open? _____

   _____

   To close? _____

   _____

5. Label the lettered parts of the magneto ignition system shown below.

A _____ F _____

B _____ G _____

C _____ H _____

D _____ I _____

E _____ J _____

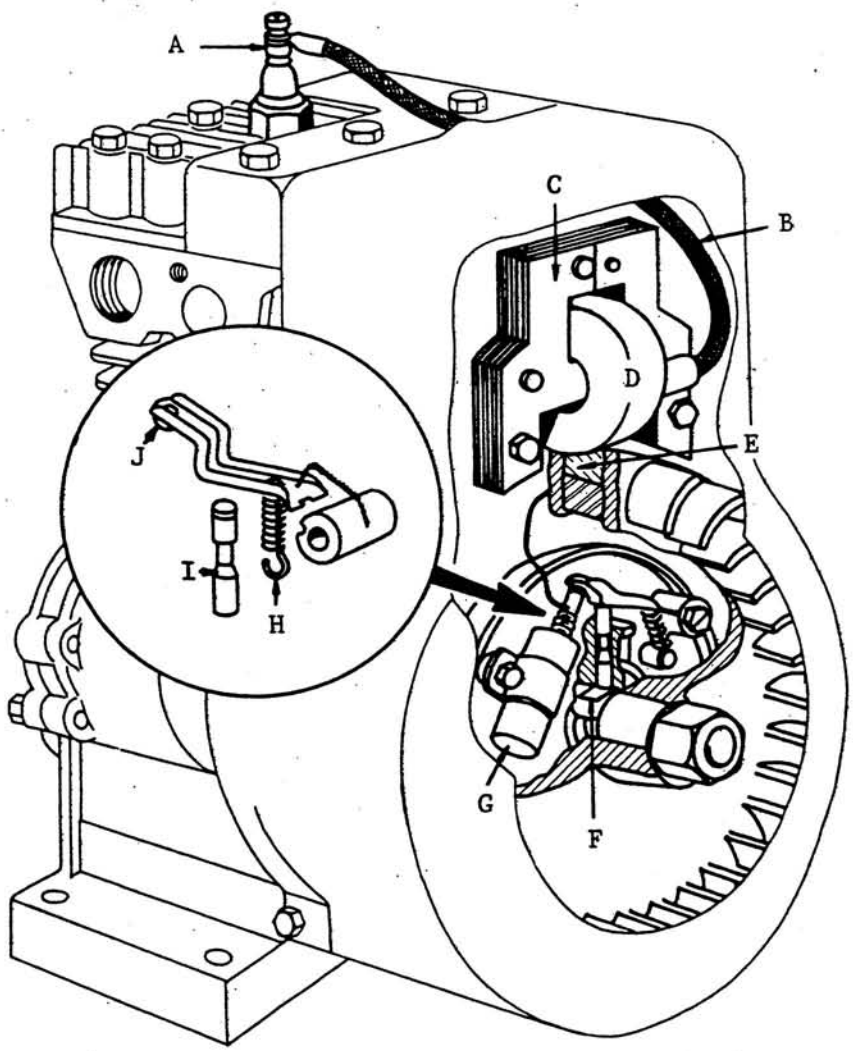

Classroom Exercise IIIb

SOLID STATE IGNITION SYSTEM

1. Label the numbered parts of the solid state-ignition system shown in the schematic below.

(1-A and 1-B) _____ (6) _____

(2) _____ (7) _____

(3) _____ (8) _____

(4) _____ (9) _____

(5) _____

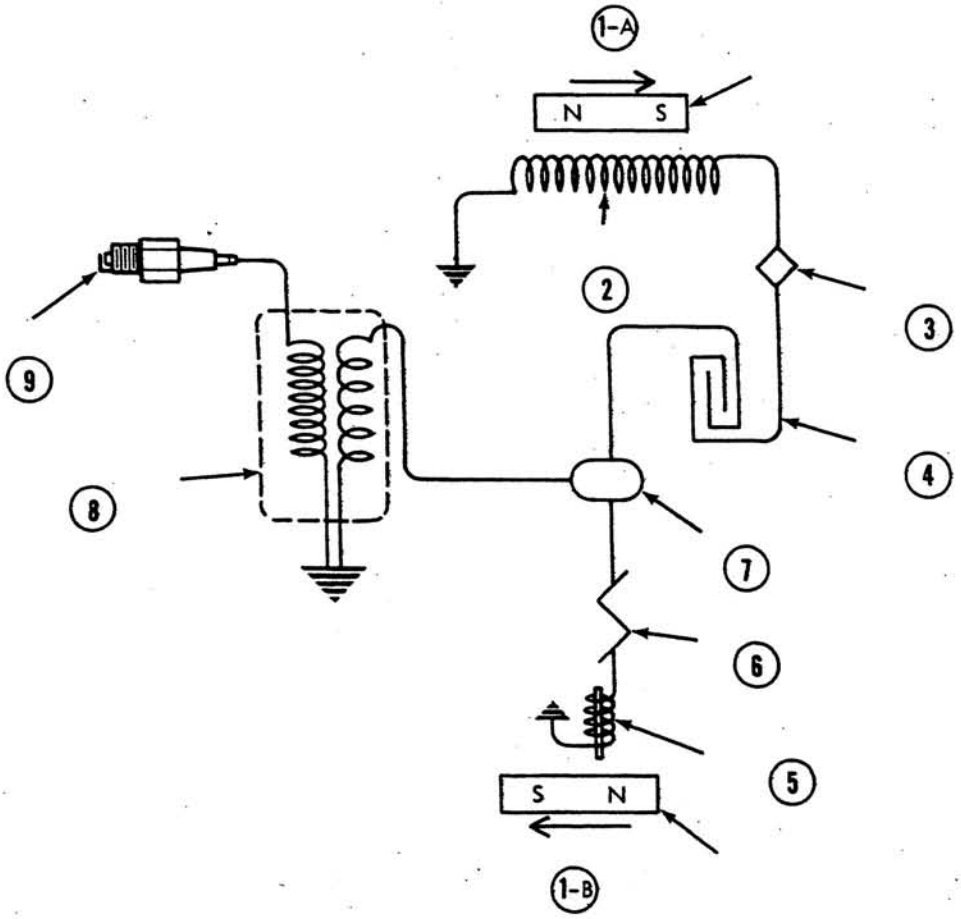

2. Describe the function of each of the following parts:

a. magnet _____

_____

b. input coil _____

_____

c. rectifier _____

_____

d. capacitor _____

_____

e. trigger coil _____

_____

f. resistor _____

_____

g. silicon controlled rectifier _____

_____

h. pulse transformer _____

_____

Laboratory Exercise II

IGNITION

In Laboratory Exercise I, you removed the flywheel, crankcase cover plate, and crankshaft. You will now need to replace these parts to make an analysis of the ignition system.

1. Using the spark tester, make a check of the spark by spinning the flywheel.
   Will the spark jump a .166 inch gap? _____; a .008 inch gap? _____

2. What is the condition of the flywheel key?

3. Explain what effect a partially sheared flywheel key will have on ignition timing.

4. Using a feeler gage, measure and report the armature air-gap. _____
   What should it be? _____

5. Remove the flywheel.

6. Remove the breaker-point cover. Make a sketch of what you see. Include the armature and coil unit, breaker-points, condenser, sparkplug, and all electrical wires. Identify these parts by name and use a red pencil for the primary circuit and a blue pencil for the secondary circuit. Are the parts and wires properly installed, and in good condition?

7. Check breaker-point gap with a feeler gage.

   a. breaker-point gap found _____

   b. manufacturer's recommended gap _____

8. Check the sparkplug gap with a feeler gage.

   a. gap found _____

   b. manufacturer's recommended gap _____

9. Using manufacturers' recommendations, check coil and condenser. Report findings.

Problem Area IV

CARBURETION

Introduction - In the previous two problem areas, we have discussed engine operation, compression, and ignition. The third and final part to understanding the total operation of small gasoline engines is carburetion.

Functions of the carburetion system are to atomize the fuel, to mix it with the proper proportion of air, and to deliver the correct amount of the fuel-air mixture to the cylinder. The major parts of the system include the air cleaner, fuel tank and lines, and carburetor. Economical fuel consumption and smooth engine operation require a carburetor that is correctly adjusted and properly maintained.

PRINCIPLES OF OPERATION

Low pressure or vacuum which is created when the piston moves downward in the engine cylinder, in the case of the four-stroke cycle engine, draws both air and fuel from the carburetor into the cylinder for combustion. However, when the piston in the two-stroke cycle engine is moving upward, it draws the air-fuel mixture from the carburetor into the lower-pressure area of the sealed crankcase. Regardless of the engine type, it is this difference between pressure inside the cylinder, or crankcase, and the atmospheric pressure outside the engine which cause both the air and atomized fuel to flow into the cylinder, or crankcase.

VENTURI

The venturi in the carburetor increases the velocity of incoming air. When air is forced through a restricted area, it must accelerate in order to maintain the volume of flow. This principle is illustrated in figure 23.

A venturi is much like the narrow space between two buildings. When the wind blows, the velocity of the air flowing between the two buildings is much greater than it is in an open area. The high velocity created by the venturi produces low pressure at the fuel nozzle discharge holes. This condition of low pressure causes the fuel to flow into the venturi where it is atomized and mixed with the air.

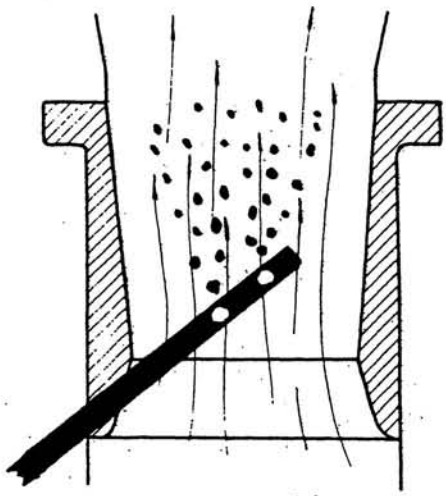

Figure 23. Air moving through the venturi increases in velocity and atomizes the fuel

CARBURETOR TYPES

Gravity feed - The fuel tank is located above the carburetor in this system. Fuel flows by gravity into the carburetor bowl as shown in figure 24. There are air vents in both the gas tank cap and the top part of the carburetor. These vents help prevent vacuum lock, and they provide for a free flow of fuel. If one of these holes becomes plugged, the flow of fuel stops, and so does the engine.

As the fuel enters the carburetor bowl, it raises the carburetor-bowl float. The float in turn raises the float valve until the float valve touches the seat. This shuts off fuel flow. The position of the float

at this time is called float level. The float level should be set to the manufacturer's specifications.

As the pressure in the intake passage is decreased, it creates a low pressure area that extends into the carburetor throat and venturi. The air pressure above the fuel in the bowl pushes the fuel down into the bowl

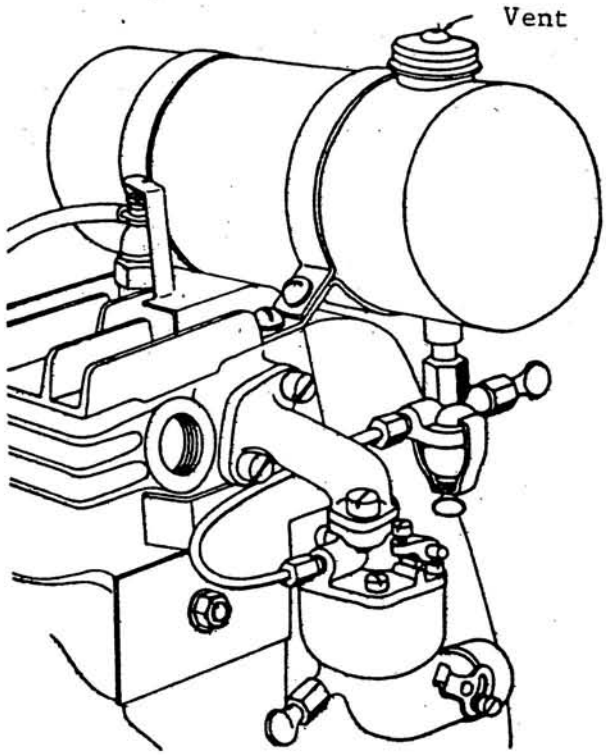

Figure 24. Gravity feed carburetor

and into the nozzle to the discharge holes. At the same time the air rushes into the carburetor air horn and through the venturi where its velocity is greatly increased. The nozzle extends through the air stream, creating a greater reduction in pressure on the upper side. This allows the fuel to stream through the discharge holes into the venturi. Here fuel mixes with the air and becomes a combustible mixture (Fig. 25).

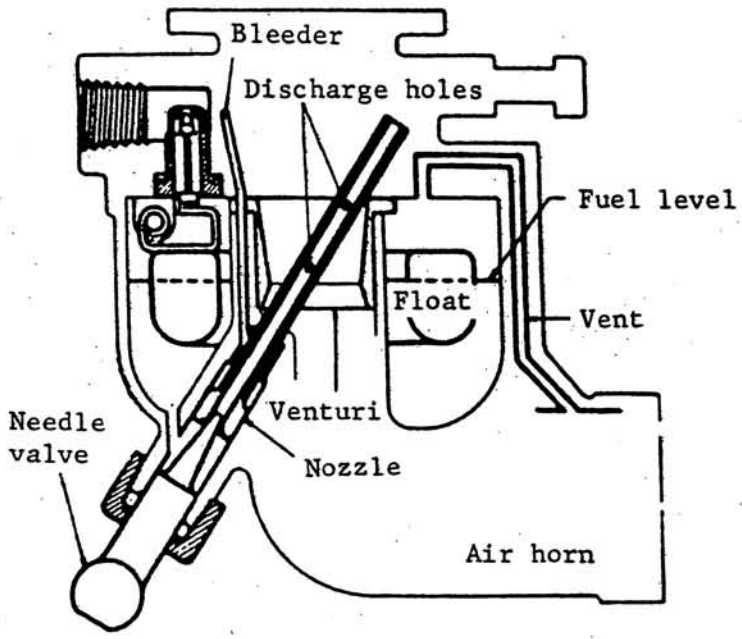

Figure 25. Functional parts of a gravity feed carburetor

Suction feed - With the type of carburetor illustrated in figures 26 and 27, the fuel tank is located below the carburetor. The force of gravity cannot be utilized in moving fuel to the carburetor; therefore, the force of atmospheric pressure must be used.

As a low pressure area is created in the carburetor throat, the difference in pressure between the tank and the carburetor throat lifts the fuel up the fuel tube, past the needle valve, and through the two discharge holes shown in figure 27. The throttle is quite thick at this point, giving a venturi effect through the use of an airfoil, thus, aiding in the vaporization of fuel.

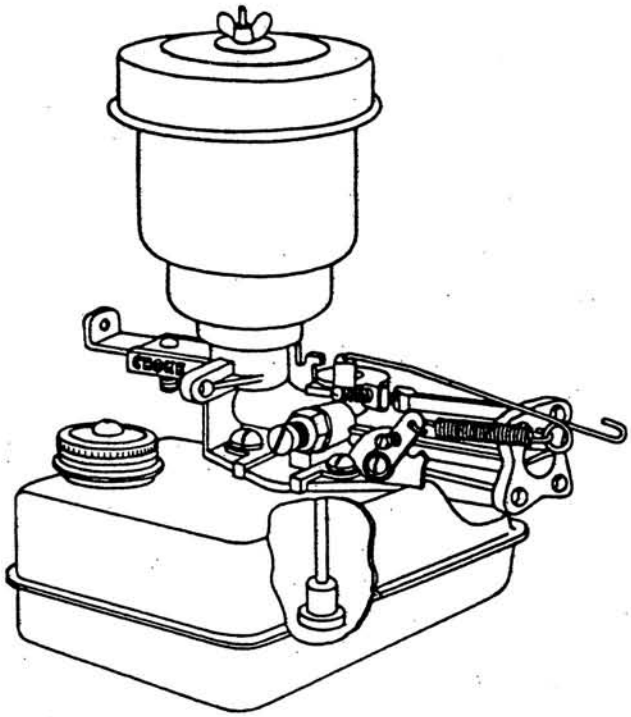

Figure 26. Suction feed carburetor

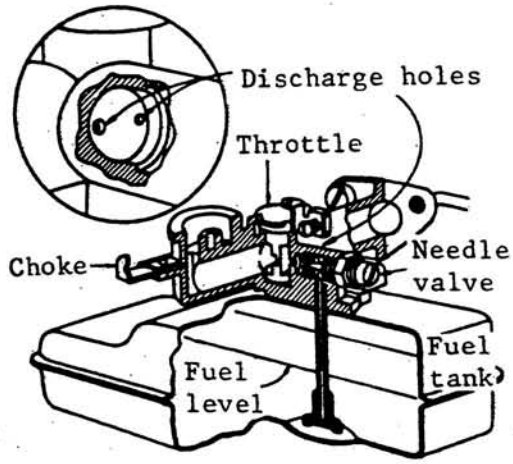

Figure 27. Functional parts of suction feed carburetor

CARBURETOR ADJUSTMENTS

Needle valve - The amount of fuel used at operating speed is metered by the needle valve. Adjusting the needle valve changes the fuel-air mixture. This adjustment must be done while the engine is running at operating speed--not idle speed. The needle valve is a high-speed air-fuel mixture adjusting valve. A mixture that is too lean (not enough fuel) is not economical because it causes overheating, short valve life, and rough operation. A mixture that is too rich (too much fuel) wastes fuel and causes fouled sparkplugs. Some carburetors have no needle valve adjustments. In these carburetors the needle valve is preset by the manufacturer.

Idle valve - On some carburetors, to supply fuel for idle speed, the discharge nozzle extends into the idle valve chamber (Fig. 28). The idle valve chamber leads into the carburetor throat just beyond the throttle plate.

Here the pressure is lower than anywhere else in the carburetor throat. Fuel rises in the nozzle past the main discharges and idle valve into the carburetor throat. The amount of fuel delivered is adjusted by turning the idle valve in or out. This adjustment should be made after the needle valve has been adjusted and while the engine is operating at idle speed. Some carburetors have no idle valve adjustment since the idle jet has been preset by the manufacturer.

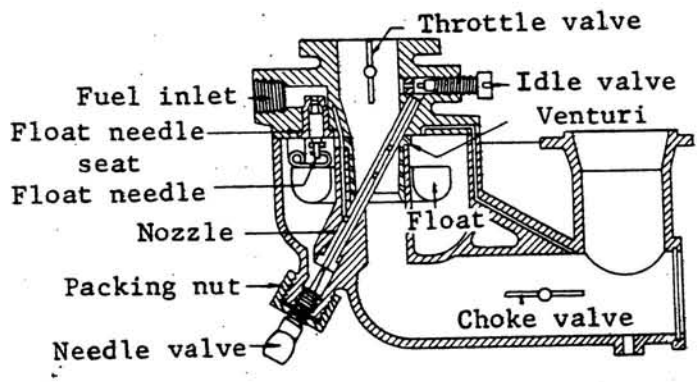

Figure 28. Idle and needle valve adjustments

Choke - Starting an engine when it is cold requires a richer air-fuel mixture than when it is warm. This is because cold gasoline does not vaporize readily; therefore, a substantially greater proportion of fuel must be introduced into the air stream to obtain a combustible mixture. This is accomplished by choking. A butterfly, called a choke, is mounted on a shaft and positioned in the air horn illustrated in figure 29. The choke regulates pressure in the venturi, thereby increasing the flow of fuel from the discharge nozzles. This permits the operator to control the resulting mixture of fuel and air. The choke is closed for starting and opened again as soon as the engine fires. On larger engines a spring-loaded device called a poppet valve is mounted on the butterfly similar to that shown in figure 29. The purpose is to avoid over-choking. At the

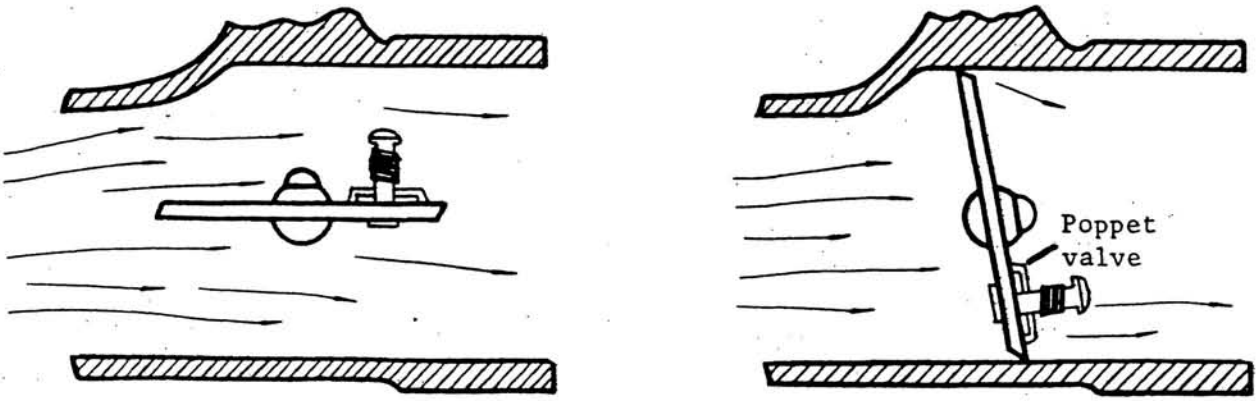

Figure 29. Choke positions. Left - choke opened, Right - choke closed

instant the engine starts, excessive amounts of fuel may be drawn into the engine before the choke can be opened. the spring device reacts, due to the excessive pressure, allowing more air to enter the air horn, thus producing a leaner mixture. Prolonged choking may be harmful to the engine since it causes more gasoline to be drawn into the cylinder. The richer mixture may dilute the crankcase oil, and it may even cause scuffing of the cylinder walls if the oil film from between the piston rings and the cylinder wall is washed away.

THROTTLE

To regulate operating speed, a flat disc, often called a butterfly or throttle valve, is mounted on a shaft in the carburetor throat just beyond the venturi (Fig. 30). When the throttle is fully open, the air flow is little affected. However, as the throttle is closed, it restricts the flow of air to the intake passage. This decreases the power and speed of the engine. At the same time it allows the pressure in the venturi area to increase. The difference between the air pressure in the fuel tank

and the venturi is decreased; therefore, the movement of fuel through the nozzle is slowed. However, the proportion of fuel and air remains approximately the same. When the engine is slowed to an idle, the throttle valve is nearly or completely closed. What happens in this idle situation will be discussed later in this unit.

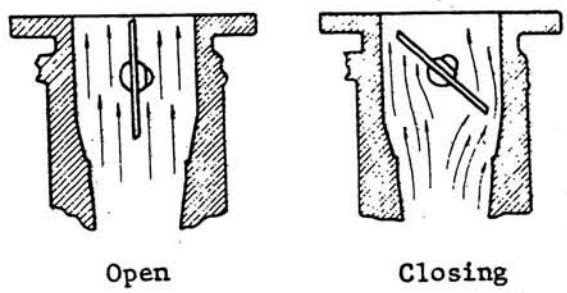

Figure 30. Air flow through throttle

GOVERNOR

The function of the governor on an engine is to maintain a desired speed regardless of load. At a fixed throttle position, the engine will speed up if the load is decreased, or slow down if the load is increased. With the aid of a governor the throttle will close as the load decreases or open as the load increases.

The two most common governor systems are the air vane type and the mechanical type (Fig. 31, 32).

Air vane type - The air vane governor system illustrated in figure 31 is operated by the force of air currents away from the flywheel fins. When the engine is operating, the air from the fins blows against the air vane, which is connected directly to the carburetor throttle. The force and movement of the air on the air vane tends to close the throttle valve,

thus slowing the engine. At the same time the governor spring opposes this movement pulling the throttle open. This spring is usually connected to an adjustable control so that the tension on the spring can be readily adjusted by the operator. An increase of spring tension increases engine

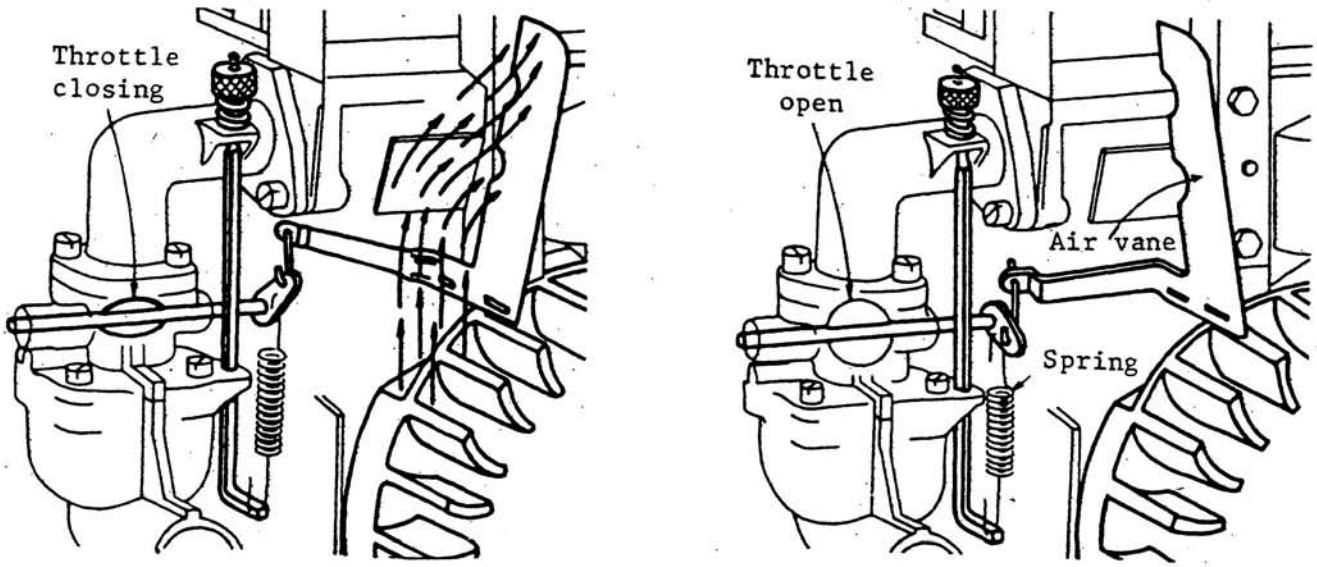

Figure 31. Air vane governor operation

speed. Decreasing this tension will slow the engine speed. The point at which the pull of the spring equals the force of the air vane is called the governed speed.

Mechanical type - The mechanical governor system shown in figure 32 works in a manner similar to the air vane type except that, instead of the force of air blowing against the vane, centrifugal weights oppose the governor spring. As the load on the engine increases, slowing the engine, the centrifugal force of the weights decreases and allows the governor spring to pull the throttle open. This increases the amount of air-fuel mixture intake and compensates for the increased load; thus, the desired speed is maintained.

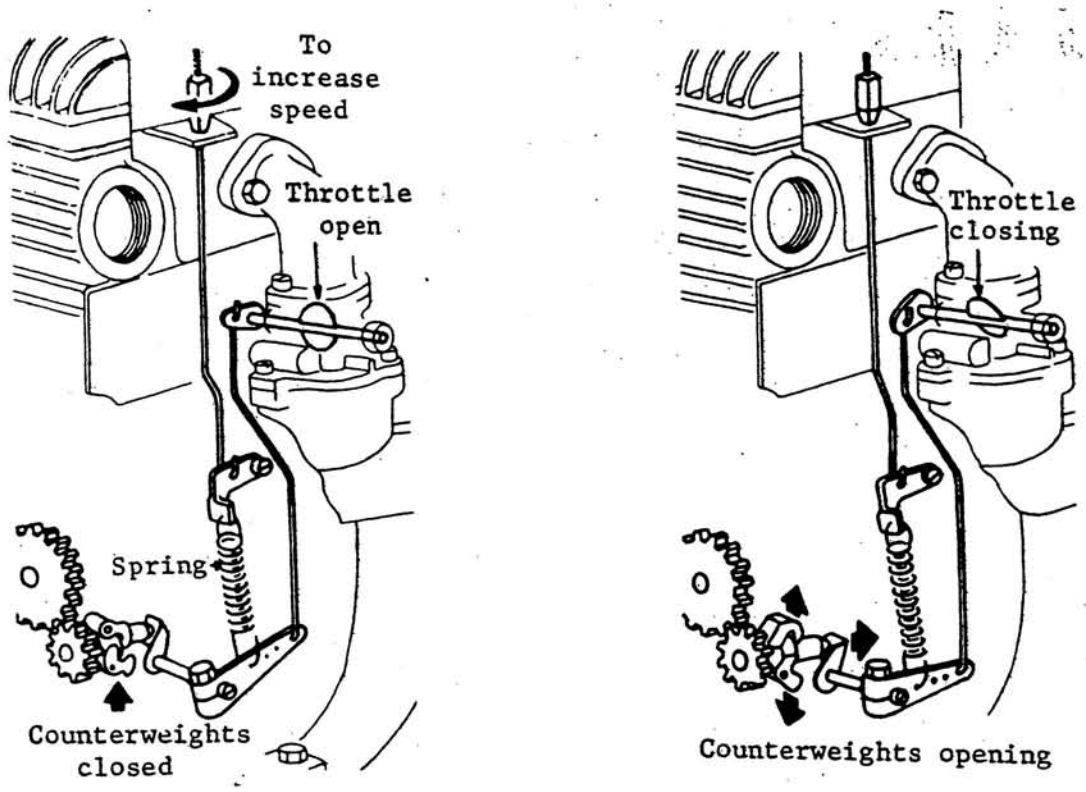

Figure 32. Mechanical governor operation

AIR CLEANERS

Small gasoline engines often operate in dusty and dirty conditions--the major cause of engine wear. Therefore, it is important to prevent dust and dirt from being carried into the engine through its carburetor. The air cleaner serves this purpose. Engines use very large amounts of air--about 9,000 gallons of air for each gallon of gasoline. If the air cleaner is functioning improperly, dirt will enter the combustion chamber, causing excessive wear of rings, cylinder walls, and moving parts.

There are several types of air cleaners. The oil bath type contains lubricating oil in its base. All air passes through the oil before entering the air horn of the carburetor. Dust and dirt are removed from the air

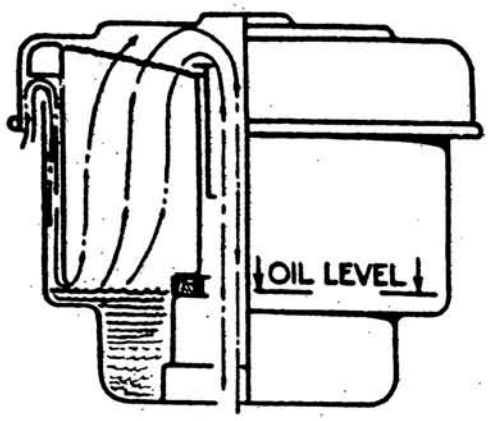

Figure 33. Oil bath air cleaner

and accumulates as sediment in the bottom of the oil cup. This is the oldest type of air cleaner, and until the dry element air cleaner was developed, it was considered the most efficient.

The oil saturated type of air cleaner, contains foam or fine wire mesh which is saturated with lubricating oil. As the air passes through the oil saturated material, dirt clings to the film of oil on the rubber foam or mesh.

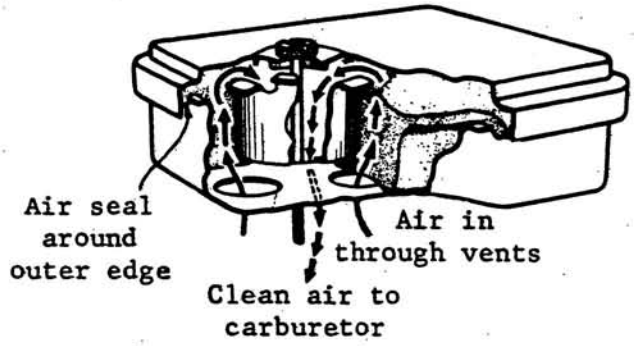

Figure 34. Oil saturated air cleaner

A third type of air cleaner, the dry element type, is more commonly found on larger engines (Fig. 35). It is one of the newer and more efficient of all types available. In operation, air is drawn through a paper element which contains openings small enough to obstruct the entrance of nearly all dust particles.

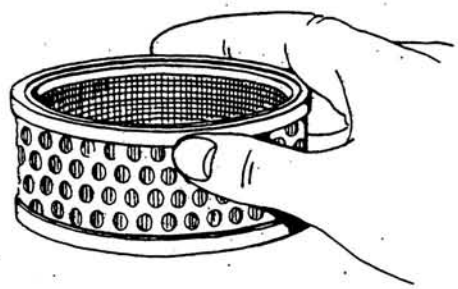

Figure 35. Dry element air cleaner

Classroom Exercise IV

CARBURETION

1. What is the basic purpose of the carburetor? _____

_____

2. Explain how the air-fuel mixture is drawn through the carburetor and into the cylinder in the case of the four-stroke cycle engine. _____

_____

_____

3. Give the function of each carburetor part:

   a. needle valve _____

   _____

   b. idle valve _____

   _____

   c. venturi _____

   _____

   d. throttle _____

   _____

   e. governor _____

   _____

   f. choke _____

   _____

4. What are the two types of carburetors most commonly used on small gasoline engines?

   a. _____

   b. _____

5. In the following blanks, name the lettered parts of the carburetor shown below.

A _____ F _____

B _____ G _____

C _____ H _____

D _____ I _____

E _____ J _____

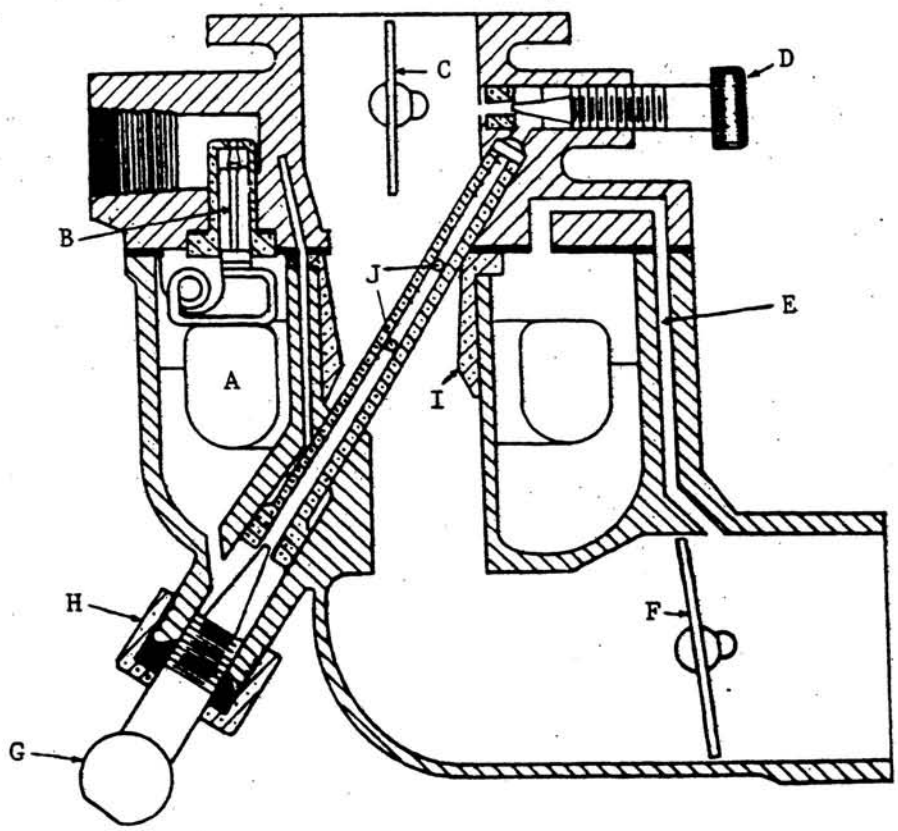

6. Use a blue pencil for air and a red pencil for fuel to show the flow of air fuel in the carburetor shown above when the engine is being choked for starting.

7. Use a blue pencil for air and a red pencil for fuel to show the flow of air and fuel in the carburetors shown below: "A" idle system, "B" high-speed system.

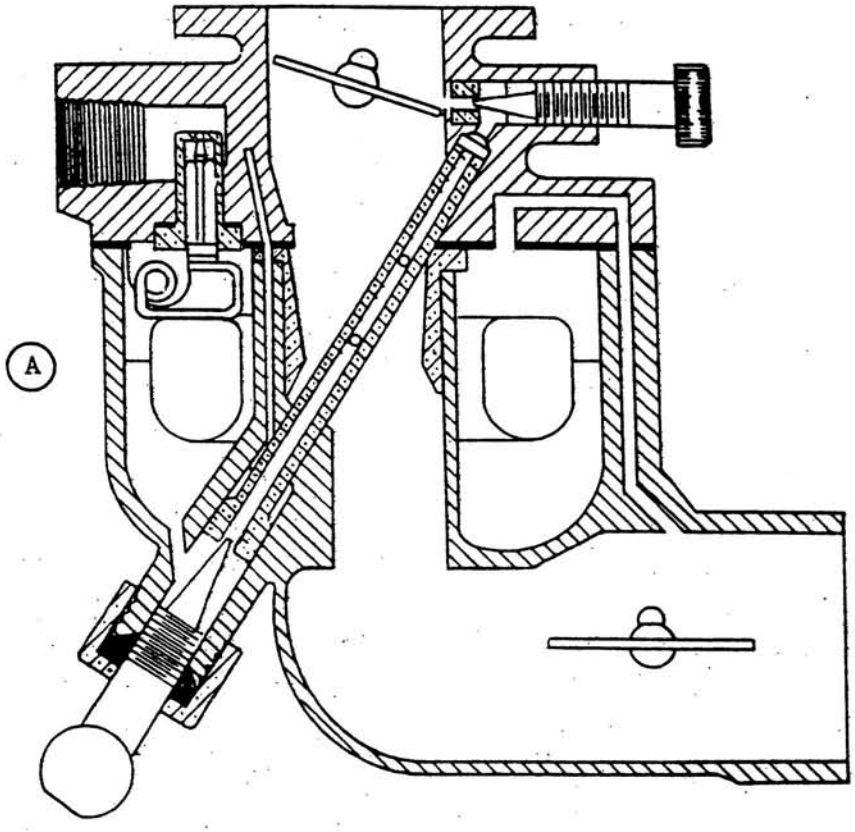

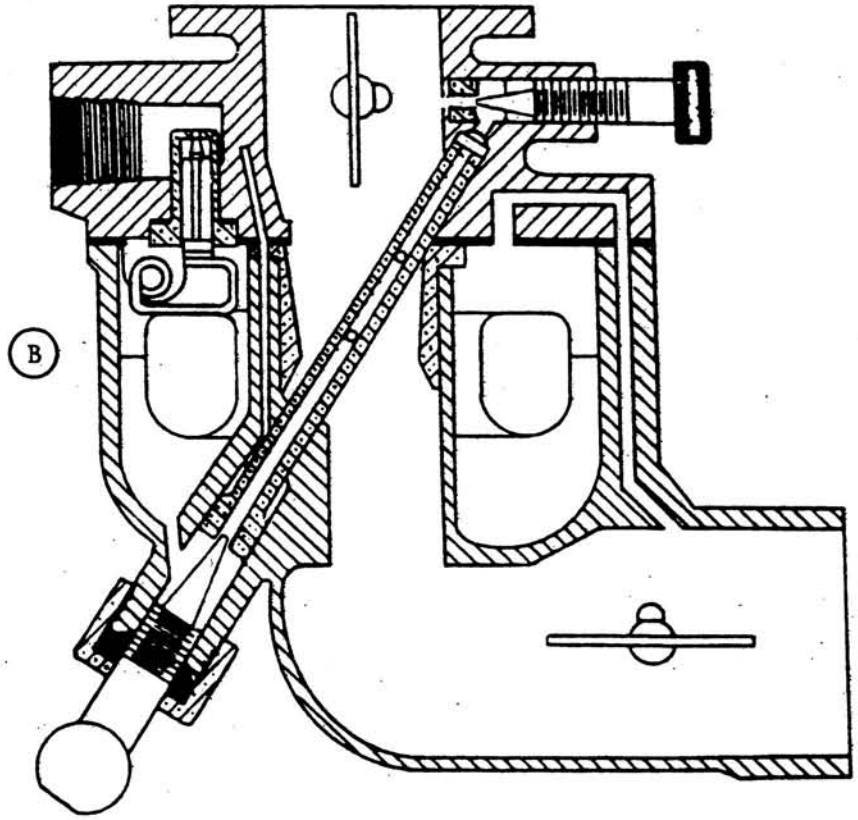

8. List and explain the operation of the three common types of air cleaners used on small gasoline engines.

   a. _____

   _____

   b. _____

   _____

   c. _____

   _____

9. Rank the three types of air cleaners mentioned above according to their efficiency or ability to remove foreign material from air with number 1 being most efficient.

   (1) _____

   (2) _____

   (3) _____

Laboratory Exercise III

CARBURETION

1. Carburetor manufacturer _____ Model _____

   Type of carburetor _____

2. Type of air cleaner _____

3. Type of governor _____

4. Remove the main fuel adjustment needle valve and its packing nut. Inspect for damage.

5. Remove the main fuel adjustment needle valve seat along with its discharge tube. The suction feed type carburetor has no discharge tube but does have a fuel pipe; however, its removal is usually not necessary unless it is clogged.

6. Remove the idle valve and inspect for damage.

7. For gravity feed carburetors, remove the float bowl and inspect the float chamber. Check the float level adjustment according to the manufacturer's specifications.

8. Reassemble the carburetor.

9. Explain the method for adjusting the following:

   a. Needle valve _____

   _____

   _____

   b. Idle valve _____

   _____

   _____

10. Adjust the needle valve and idle valve settings.

11. Explain the method for adjusting the following:

    a. Idle speed _____

    _____

    b. Top speed operation _____

    _____

Problem Area V

ENGINE REASSEMBLY

In Laboratory Exercises I, II, and III, you disassembled a laboratory engine. Now your task is to properly reassemble this engine and to get it in good repair and operating condition.

You should not depend on the workmanship of the person who previously worked on this engine. That person, in fact, may have reassembled certain engine parts improperly. Therefore, it is necessary to follow manufacturers' specifications and recommendations very carefully. Please use the check list provided in Laboratory Exercise IV for the engine reassembly. If you are in doubt about any phase of the reassembly procedure, or you find any broken parts, be sure to ask the advice of your instructor. Good Luck.

Laboratory Exercise IV

ENGINE REASSEMBLY

1. Install crankshaft.

2. Install rings on piston and the piston on the connecting rod.

3. Install piston in the cylinder.

4. Line up the assembly marks on the connecting rod and cap. Install oil dipper if used.

5. Tighten the connecting rod bolts to the proper torque. Give the torque specification for this engine. _____
   Be sure to bend up the special screw locks if used on this engine.

6. Install tappets and camshaft. Make sure the camshaft is properly timed.

7. Install engine base. In engines with an oil slinger, or oil pump, make sure it is installed properly. Some engines have a mechanical governor. Make sure it is properly assembled. Adjust crankshaft end play according to manufacturer.

8. Lap the valves. Use a small amount of lapping compound on the valve face and then rotate the valve against the seat a few times. The valves should be lapped until there is a thin ring around the entire face of the valve.

9. Install valves. Make sure the correct spring is used with the correct valves.

10. Check valve tappet clearance.

11. Install valve springs and retainers.

12. Install valve cover plate.

13. Install armature. On armatures that are located within the flywheel rim, the ignition timing is adjustable. Use manufacturer's procedure for this timing operation. Armatures that are outside the flywheel rim have an armature air-gap adjustment. On these engines, put the armature in place so that it will be far enough from the flywheel to avoid rubbing the flywheel during its installation.

14. Install and make sure breaker-points operate correctly. What is the breaker-point gap setting? _____

15. Install breaker-point cover.

16. Install flywheel. Make sure key fits its key-way properly. Tighten the flywheel nut. What is the proper torque specification? _____

17. On external armature engines, position the armature legs to flywheel magnets with the proper armature air-gap. This should be _____ to _____.

18. Do a spark test. Does the spark jump a .016-inch gap? _____ Does it jump an .008-inch gap? _____

19. Install the cylinder head and head gasket. Be sure to mount any engine parts such as shrouding or fuel tank mounts under the proper head bolts. Make a sketch of the head and give the head bolt tightening sequence. Show the location of long and short bolts. How many foot-pounds torque should be applied to the head bolts? _____

20. Set the sparkplug gap to _____. Install sparkplug.

21. Install governor and linkage.

22. Install carburetor and linkage.

23. Install fuel line, gas tank, and metal shrouding.

24. Install muffler.

25. Fill crankcase with the proper grade of fresh oil. What classification and weight of oil should this be? _____

26. Fill gas tank with fresh regular grade gasoline.

27. START YOUR ENGINE.

28. Adjust carburetor for maximum power.

29. Adjust carburetor for smooth idle.

30. Set rpm with the aid of a tachometer according to manufacturer's recommendations, which are:

    Top operating speed = _____

    Idle speed = _____

Problem Area VI

PREVENTATIVE MAINTENANCE

Since a small gasoline engine represents a sizable investment, the owner should protect this investment with proper care and maintenance. An organized program of preventative maintenance insures long engine life and saves costly repair bills. For small engines there is no exact mile or time of operation reminder, such as used in the automobile, which records the miles traveled on the odometer. The only guide that can be used for timely servicing of small engines is that of operating hours, and, at best, this is an estimate by the operator.

One rule of thumb often used to compare regular auto servicing periods and that of engine operating hours is that 50 miles is equal to one hour of operation. As an example, when you fill an automobile's gas tank with fuel, it is a common practice to check the crankcase oil level. The same practice should hold true in regard to small gasoline engines.

The reader should keep in mind that recommendations contained in this unit on preventative maintenance are only general guidelines and that manufacturer's specific recommendations should always be followed for the particular engine in question.

SPARKPLUGS

Sparkplugs should be cleaned and gapped or replaced after 100 hours of operation. Since sparkplugs operate under severe conditions, they are easily fouled. Common types of sparkplug fouling are: oil fouling, carbon fouling, lead fouling, and burned electrodes.

Oil fouling is indicated by wet, oily deposits. This condition is caused with oil is pumped past the piston rings to the combustion chamber.

Carbon fouling is indicated if the plug has dry, fluffy, black deposits. This condition may be caused by excessively rich fuel mixture, improper carburetor adjustment, a partly closed choke, or a clogged air cleaner. Slow speeds, light loads, long periods of idling, and cool operating temperature may prevent carbon deposits from being burned away.

Lead fouling or scavenger deposit is indicated by a soft, tan, powdery deposit on the plug. These deposits of lead salts build up during slow speeds and light loads. They cause no problem at slow speeds, but at fast speeds, when the plug heats up, the fouling will often cause the plug to misfire. This limits the engine's performance.

Burned electrodes are indicated by thin worn electrodes. This condition is caused by the sparkplug overheating. Overheating can be caused by a lean fuel mixture, low octane fuel, cooling system failure, or long periods of operation at high speeds under heavy load.

Sparkplugs may be cleaned with a wire brush, penknife, gasoline, or other solvent in emergency cases. A small file should be used to file the surface of the electrodes. However, it is always better to clean sparkplugs with equipment designed for doing the job. Sparkplug cleaning equipment uses a sand blasting technique and has a means of testing under

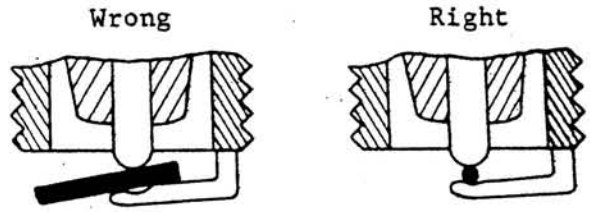

Figure 36. A round wire gage not a flat gage should be used to check used sparkplugs

compression. Do not allow any foreign material to fall into the cylinder while the sparkplug is removed.

After the sparkplug is cleaned properly, it should be gapped according to engine specifications. The recommended gap on most small engines is .030 inch. A flat feeler gage can be used to check the gap when a sparkplug is new; however, a round-wire gage should always be used on worn plugs. When sparkplugs are replaced, use the recommended sparkplug for the engine.

MAGNETOS

The magneto should be cleaned and the breaker-point gap adjusted to the manufacturer's specification after every 200 hours of operation. If breaker-points become worn or pitted, they should be replaced. Corroded or pitted points can be filed or cleaned with fine emery paper, but most manufacturers recommend replacing breaker-points rather than attempting to file or clean them.

AIR CLEANERS

A properly serviced air cleaner protects the internal parts of an engine from excessive wear by preventing dust particles from entering the engine. The required frequency of cleaning depends on operating conditions. It will vary from 25 hours of engine operation in a relatively dust-free condition to as often as several times a day in very dusty conditions.

When servicing the oil bath type, the used oil should be removed, and the filter element washed in solvent. Refill the bowl to the proper level with a specified grade of clean oil.

The saturated type--foam or mesh--should be washed in solvent, or in liquid detergent and water. The excess washing material should be blown,

shaken, or squeezed from the element. Then saturate the element with the recommended oil.

When servicing the dry element type, the paper element should be replaced at intervals specified by the manufacturer.

FUEL SYSTEM

After each 100 hours of engine operation, the fuel system, including the fuel tank, gas lines, filter, sediment bowl, and carburetor should be emptied and washed with gasoline. If gum deposits are found, the parts should be washed in alcohol, acetone, or a gum solvent.

GASOLINE

Any clean, fresh, regular grade gasoline is recommended for use in small air-cooled engines. This fuel recommendation is based on the fact that regular grade gasolines have correct octane rating for the compression ratio of these engines. Also, they have satisfactory storage characteristics. The use of highly leaded or premium grade gasolines is not recommended. They will leave deposits on the valve seats, sparkplug electrodes, and in the cylinder. These deposits shorten engine life.

ENGINE OIL

Good lubricating oil is the operator's best insurance for satisfactory engine operation and engine life. High grade, heavyduty, detergent type oil is recommended for most makes and models of small gasoline engines. Oil should be changed every 25 hours of operation while the engine is still hot. This will remove the foreign materials that have found their way into the engine. If the oil is not changed regularly, foreign materials will cause an abrasive action that reduces the life of the engine.

Lubricating oils with American Petroleum Institute (API) designation Service MS contain sufficient detergent to aid in engine cleanliness.

The SAE number on the can indicates the weight of the oil. The following oil weight recommendations should be used for seasonal operation of small gasoline engines when manufacturers' recommendations are not available.

Where temperatures are:

Above 32°F	-----	use SAE 30W or 10W - 30.
Between 32°F and 0°F	-----	use SAE 10W or 5W - 20.
Below 0°F	-----	use SAE 5W or 5W - 10.

STORING

If the engine is to be out of service for a long period of time, such as over the winter, the following pre-storage procedure is recommended:

1. Drain fuel from the tank and carburetor; start and run the engine to remove all gasoline from the fuel system.
2. Drain oil from crankcase while engine is still hot. Flush with light weight oil such as SAE 5W, or SAE 10W. Refill with the proper grade of fresh oil. Another good method is to refill the crankcase with the recommended oil; then run the engine until it reaches the full operating temperature.
3. Clean the exterior of the engine.
4. Service the air cleaner.
5. Remove, clean, and gap the sparkplug.
6. Pour a tablespoon of oil into the sparkplug hole; crank engine slowly by hand, and replace the sparkplug.
7. Paint or spread a light film of oil over any exposed surfaces of the engine which are subject to rust and corrosion.
8. Store the engine in a cool dry place.

Classroom Exercise V

PREVENTATIVE MAINTENANCE

1. How often should sparkplugs be cleaned and gapped? _____

2. Describe the following sparkplug conditions:

   a. oil fouling _____

   _____

   b. carbon fouling _____

   _____

   c. lead fouling _____

   _____

3. What causes burned electrodes? _____

   _____

4. What two types of feeler gages should be used to check sparkplug gap and when should each be used?

   a. _____

   b. _____

5. How often should the air cleaner be serviced under normal operating conditions? _____

   _____

6. Explain, on the lines below, service procedure for the three types of air cleaners:

   a. oil bath _____

   _____

   b. oil saturated _____

   _____

   c. dry element _____

   _____

7. What is the best method for cleaning gum deposits from the fuel system?

   _____

   _____

8. Why is a regular grade gasoline recommended for small air-cooled engines?

_____

_____

9. How often should engine crankcase oil be changed? _____

10. What happens to an engine when the oil is not changed on a regular basis?

_____

_____

11. What grade and weight of oil should be used for:

    a. summer operation? _____

    b. winter operation? _____

12. Why should a small amount of oil be placed in the sparkplug before winter storage? _____

_____

_____

Problem Area VII

TROUBLE SHOOTING

When trouble occurs, particularly in starting a small gasoline engine, remember the three essentials for combustion: compression, ignition, and carburetion. All three must be functioning properly before the engine will start. The working ability of any engine depends on the operator and his ability to detect engine troubles before they become serious problems.

Below is a list of troubles and their possible causes which may occur from average use and normal wear:

1. HARD STARTING

   a. Faulty ignition

      (1) loose or grounded high tension or breaker-point leads
      (2) improper breaker-point gap
      (3) faulty sparkplug
      (4) faulty condenser or coil
      (5) incorrect ignition timing

   b. Faulty carburetion

      (1) gas not getting to carburetor--dirt or gum in fuel line
      (2) dirt in carburetor
      (3) carburetor improperly adjusted

   c. Compression loss

      (1) leaking or sticking valves
      (2) worn or broken rings
      (3) leaking head gasket
      (4) loose, cracked, or warped cylinder head
      (5) cracked piston and scored cylinder

2. OVERHEATING

   a. lack of cool air
   b. dirty air cleaner and cooling fins
   c. improper fuel
   d. fuel mixture too lean
   e. improper ignition timing

3. BACKFIRING

   a. fuel mixture too lean
   b. intake valve sticking
   c. improper timing

4. OCCASIONAL MISSING AT HIGH SPEEDS

   a. sparkplug gap too wide
   b. wrong type sparkplug
   c. improper ignition timing
   d. improper carburetor setting or lack of fuel

5. MISSING UNDER SLOW HARD PULL

   a. sparkplug gap too wide
   b. pitted breaker-points
   c. defective sparkplug wire
   d. fouled sparkplug

6. ENGINE KNOCKING

   a. fuel octane rating too low
   b. engine overheating
   c. improper timing
   d. connecting rod bearing loose
   e. excessive carbon in combustion chamber

7. OPERATING ERRATICALLY

   a. clogged fuel line
   b. water in fuel
   c. faulty choke control
   d. improper carburetor setting
   e. loose ignition system connections
   f. air leaks in manifold or carburetor connections
   g. improper fuel mixture for two-stroke cycle engine

8. ENGINE NOT IDLING PROPERLY

   a. improper carburetor idling adjustment
   b. carburetor jets clogged
   c. sparkplug gap too small
   d. leaking carburetor or manifold gaskets
   e. valves and ports sticking or leaking
   f. weak coil or condenser

GLOSSARY

Air cleaner	A device for filtering, cleaning, and removing inert material from the air admitted to an engine.
Air-fuel ratio	The ratio, by weight, of fuel and air in the carburetor mixture.
Back-fire	Ignition of the mixture in the intake manifold caused by flame from the cylinder, such as might occur from a leaking intake valve.
Bearing	A part on which a journal or pivot turns or moves.
Blow-by	A leakage or loss of pressure, often used with reference to leakage of compression past the piston rings.
Bore	The diameter of a hole, such as a cylinder; also a tool used to enlarge a hole.
Breaker-points	Two contact surfaces that are mechanically opened and closed to control flow of electricity; essentially an electrical switch.
Camshaft	The shaft containing lobes, or cams, to operate the engine valves.
Carbon	A black, non-metallic element which is an excellent conductor of electricity. Carbon residues form in the combustion chamber of an engine during the burning of fuels, which are largely composed of hydrocarbons.
Carburetor	A device for automatically mixing fuel in the proper proportion with air to produce a combustible gas.
Check-valve	A gate or valve which allows passage of gas or fluid in only one direction.
Choke	A reduced passage, such as a valve placed in a carburetor air horn to limit the volume of air admitted.
Circuit	The path of electrical current, fluids, or gases.
Clearance	The space between two parts, such as between a journal and a bearing.
Coil	Essentially a transformer which through the action of induction converts low voltage to high voltage.

Combustion	The process of rapid burning or explosion.
Combustion chamber	A cylindrical space shaped by the cylinder walls, with the engine head enclosing the space on one end and the piston head enclosing it on the other end.
Compression	The reduction in volume or the "squeezing" of a gas.
Compression ratio	The volume of the combustion chamber when the crankshaft is at bottom-dead center as compared to the volume when the crankshaft is at top-dead center.
Condenser	A device for temporarily collecting and storing a surge of electrical current for later discharge.
Conductor	A material along or through which electricity will flow with slight resistance.
Connecting rod	The device that connects the piston to the crankshaft.
Crankcase	The housing within which the crankshaft and many other parts of the engine operate. It is often used as a storage vat for engine lubrication oil.
Crankshaft	The main shaft of the engine which in conjunction with the connecting rods changes the linear reciprocating motion of the piston into rotary motion.
Cylinder	A round hole bored to receive a piston; sometimes referred to as "bore" or "barrel."
Cylinder block	The main mass of metal in which the cylinders are bored and the pistons are placed.
Cylinder head	Usually a detachable portion of an engine fastened securely to the top of the cylinder block. The cylinder head and the cylinder block may be constructed in one casting as often is the case with two-stroke cycle engines.
Cylinder sleeve	A liner or tube interposed between the piston and the cylinder block to provide a readily renewable wearing surface for the cylinder.
Exhaust pipe	The pipe connecting the engine's exhaust passage to the muffler, and it conducts exhaust gases away from the engine.
Exhaust valve	A valve which permits a gas to exit the combustion chamber, and which seals the exit.

Float	A hollow tank filled with air, bouyant in the fluid in which it rests and which is ordinarily used to automatically operate a valve controlling the entrance of fuel.
Float level	The pre-determined height of the fuel in the carburetor bowl, usually regulated by means of a float valve.
Four-stroke cycle engine	An explosion occurs every second revolution of the crankshaft, a stroke being considered as one-half revolution of the crankshaft. These strokes are (1) suction or intake, (2) compression, (3) power, and (4) exhaust.
Gasket	Anything used as a packing, usually a non-metallic substance placed between two metal surfaces to act as a seal.
Governor	A device used to automatically regulate speed.
Idle	Refers to the engine operating at its slowest recommended speed.
Ignition system	The means for igniting fuel in the cylinders; includes sparkplugs, wiring, ignition, distributor, ignition coil, and source of electric supply.
Intake valve	A valve which permits a gas to enter the combustion chamber and seals the entrance.
Intake manifold	The tube used to conduct the air-fuel mixture from the carburetor to the engine cylinder.
Internal combustion	The burning of a fuel within an enclosed space.
Muffler	A chamber attached to the end of the exhaust pipe which allows the exhaust gases to expand and cool. It is usually fitted with baffles or porous plates and serves to subdue some noise created by the engine.
Piston	A cylindrical part closed at one end which is connected to the crankshaft by the connecting rod. The force of explosion in the cylinder is against the closed end of the piston, causing the connecting rod to move the crankshaft.
Piston displacement	The volume of air extracted by moving the piston from one end of its stroke to the other end.
Piston head	The part of the piston above the rings and the part that receives the thrust of combustion.

Piston pin	The journal for the bearing in the small end of an engine's connecting rod which also passes through piston walls; also known as a wrist pin.
Piston ring	An expanding ring placed in the groove of the piston to provide a seal; prevents passage of fluid or gas past the piston, and minimizes the contact of the piston to the cylinder wall.
Piston ring end-gap	The clearance between the ends of the piston rings when placed in a cylinder.
Piston ring-groove	The channel or slot in the piston in which the piston rings are placed.
Port	A hole through which gases may enter or exit
Scoring	A scratch, ridge, or groove marring a finished surface.
Spark	An electrical current possessing sufficient pressure to jump through the air from one electrode to another.
Spark advance	When used with reference to an ignition distributor, means to cause the spark to occur at an earlier time in the timing circle.
Spark gap	The space between the electrodes of a sparkplug through which the spark jumps.
Sparkplug	A device inserted into the combustion chamber of an engine containing an insulated control electrode for conducting current. It delivers the spark needed for combustion.
Stroke	The total distance moved by the piston in one-half revolution of the crankshaft.
Throw	The distance from the center of the crankshaft main bearing to the center of the connecting rod journal.
Two-stroke cycle engine	An engine design permitting one power stroke for each revolution of the crankshaft.
Valve	A device for opening and closing the passage that admits the air and gas mixture into the cylinder.
Valve clearance	The gap allowed between the end of the valve stem and the valve lifter to compensate for expansion of the valve due to heat.

Valve face	That part of a valve which mates with and rests upon a seating surface.
Valve head	The portion of the valve upon which the valve face is machined.
Valve seat	The matched surface upon which the valve face rests.
Valve stem	That portion of a valve which rests within a valve stem guide.
Valve stem guide	A bushing or hole in which the valve stem is placed. Tolerances between guide and stem are small.
Vapor lock	A condition where the fuel boils in the fuel system forming bubbles which retard or stop the flow of fuel to the carburetor.
Venturi	An area in an air-flow tube that restricts in part the easy flow of air through the tube and makes low pressure at the restricted area.

Appendix

SMALL GASOLINE ENGINE ANALYSIS

Introduction - This section is designed to be used by the student as a step-by-step analysis technique for evaluating performance of a small gasoline engine. The teacher may substitute this section for Laboratory Exercises I, II, III, and/or IV; or he may ask the student to complete this section as the student does those exercises. It can also be used as an analysis form in examining engines that students repair outside the laboratory setting.

The student must have a repair manual applicable to the engine on which he is working. From the repair manual, the student will find information that he will report on this form under "should be" and "reject size" columns, and he will answer questions concerning the general condition of engine parts.

Make of engine _____ Serial number _____

Model _____ Type _____

Pre-disassembly checks

1. Crankshaft end play. Found _____ Should be _____

2. Spark test. Does the spark jump a .166-inch gap? _____
   Does it jump a .008-inch gap? _____

Disassembly checks

3. Ignition.

   a. Flywheel magnet to armature air gap.
      Found _____ Should be _____

   b. Condition of flywheel key.

   c. Ignition breaker-point gap.
      Found _____ Should be _____

d. General condition of breaker-points and mechanism to drive them.

e. Results of coil test.

f. Results of condenser test.
Report microfarads Found _____ Should be _____
Does the condenser leak?

g. General condition of ignition system wiring.

h. Sparkplug gap. Found _____ Should be _____

i. Condition of sparkplug electrode.

j. Make and number of sparkplug. Found _____ Should be _____

4. Condition of cylinder head and head gasket.

5. Valve tappet clearance.

	Found	Should be
Intake	_____	_____
Exhaust	_____	_____

6. General condition of valves (stem, face, and margin).

7. General condition of valve seats and valve guides.

8. General condition of piston skirts.

9. Piston ring-groove clearance with new ring.
Maximum found _____ Reject size _____

10. Piston ring-gap (end-clearance).

	Found	Reject size
Compression (top)	_____	_____
Compression (center)	_____	_____
Oil (bottom)	_____	_____

11. Piston pin bore. Found _____ Reject size _____

12. Piston pin measurement.

	Found	Reject size
Pin diameter	_____	_____
Out of round	_____	_____

13. Cylinder walls.
a. Dimensions.

	Found	Reject size
Top	_____	_____
Bottom	_____	_____
Out of round	_____	_____

b. General condition of cylinder walls.

14. Crankshaft.
    a. General condition (scoring, bent).

    b. Journal measurements.

	Found	Reject size
Magneto	_____	_____
Crank pin	_____	_____
PTO	_____	_____

15. Bearings.
    a. Connecting rod measurements.

	Found	Reject size
Piston pin	_____	_____
Crank pin	_____	_____

    b. Main bearings measurements.

	Found	Reject size
PTO	_____	_____
Magneto	_____	_____

    c. General condition of bearings

16. Carburetion--Explain general condition of carburetor as relates to specifications set up by manufacturer for specific type of carburetor and engine.

17. Other--Explain general condition of governor, air cleaning device, and starting mechanism, as it relates to specifications set up by manufacturer.

18. List new parts needed and their costs.

Parts and part, or manufacturer's number	Cost

19. Is it economical to repair this engine? If not, go to Final analysis.

Reassembly specifications

20. Fill out the torque table below:

	Should be	
	Inch-pounds	Foot-pounds
Head bolts		
Connecting rod bolts		
Flywheel		

21. Cylinder head torque sequence. Sketch a drawing showing the location of head bolts. Number bolts in recommended tightening sequence:

22. What is the end play of the crankshaft after final assembly? _____

23. Final analysis: Write a brief explanation of condition after repair, or reasons for not repairing the engine.